DANA®

EXACT

electronics, inc.

INSTRUCTION MANUAL
MODEL 400
WAVEFORM SYNTHESIZER

Digitized by the Internet Archive
in 2025

https://archive.org/details/manualsplus_07656

INDEX

SECTION I	SPECIFICATIONS & APPLICATIONS
SECTION II	CIRCUIT DESCRIPTION
SECTION III	OPERATING INSTRUCTIONS
SECTION IV	CALIBRATION PROCEDURE
SECTION V	SCHEMATICS

SECTION I

SPECIFICATIONS

APPLICATIONS

1. EQUIPMENT (SAME AS FOR 400 CAL PLUS A CALIBRATED 400)

2. CONTROLS (SAME INITIAL SETTINGS AS 400 CAL)

3. PLUG-INS

   A. 4002 MAY BE CALIBRATED IN EITHER CHANNEL. ASSECOND PLUG-IN NEED NOT BE PRESENT IN THE OTHER CHANNEL.
   B. TWO TYPE 40 PROGRAMMERS MUST BE USED. ADJUST PROGRAMMER IN CHANNEL CORRESPONDING.

	CONTROLS		MEASURE		ADJUST OR TEST		
STEP	MODE	TIME/INC	AT	WITH	AT	WHAT	FOR
1	PLACE A JUMPER BETWEEN TP23 AND TP24 POWER SUPPLY P.C. (EASY ACCESS FROM FRONT SIDE OF BOARD)						
2	ALL	INITIAL	PWR SUPPLY TP 23	VOLTMETER	4002	SLOPE BAL	0.00 ±.05V
3	"	"	MAIN OUT	"	"	DC LEVEL	0.00 ±0.05V
4	"	"	MON	"	TYPE 40	#1 POT	0.00 ±.05V
5	A. REMOVE JUMPER PLACED IN STEP #1. B. CONNECT FUNCTION GENERATOR TO EXT GATE JACK. C. SELECT 10V P-P SQUARE AT 10KHz. D. TRIGGER SCOPE AT 10µSEC/CM FROM FUNCTION GENERATOR.						
6	ALL8	INITIAL	MON	SCOPE	TYPE 40	#2 POT	1.0 ±0.1V 2ND INC.
7	"	"	MAIN	"	4002	SLOPE CAL	+2.5 ±.2V 2ND INC CHANGE
8	"	"	"	"	"	DC LEVEL	0.00 ±0.1V IN LOCKOUT
9	REPEAT STEPS 7 AND 8 UNTIL BOTH CONDITIONS ARE MET.						
10	TIME VAR	FULL CCW	MAIN	SCOPE	400	SLOPE TRACK	+2.5V ±.2V AT END OF 2ND INC
11	TIME VAR TIME/INC	FULL CW 330NSEC	"	"	"	330NSEC SLOPE	"
12	TIME/INC	100NSEC	"	"	"	100NSEC SLOPE	±2.5V ±.5V AT END OF 2ND INC
13	SELECT FROM FUNCTION GENERATOR 10V P-P SQUARE AT 1Hz.						
14	TIME/INC	330MSEC	MAIN	SCOPE	4002	SLOW SLOPE BAL	0.00 ±0.05V 1ST INC CHANGE

1. EQUIPMENT

   A. CALIBRATED 400 WITH TWO TYPE 40 PROGRAMMERS.
   B. OSCILLOSCOPE (TEKTRONIX TYPE 580 OR EQUIVALENT)
   C. FUNCTION GENERATOR (EXACT 301 OR EQUIVALENT)

2. PLUG-IN REQUIREMENTS

   A. 4005 IS MOST EASILY CALIBRATED IN THE "A" CHANNEL. ANOTHER PLUG-IN MUST BE PRESENT IN THE OTHER CHANNEL. THIS STEP IS ASSUMED.
   B. CALIBRATE AMPLIFIER SECTION AS SHOWN FOR 4001.

	CONTROLS		MEASURE		ADJUST OR TEST		
STEP	MODE	PROGRAM 4005	AT	WITH	AT	WHAT	FOR
11	A. SET TIME/INCREMENT 10µSEC INTERNAL, CALIBRATED B. CONNECT FUNCTION GENERATOR TO EXT GATE JACK. C. SELECT 10V P-P SQUARE AT 10KHz.						
12	GATE	10	4005 TP 4	SCOPE	CHECK	PULSES	10µSEC WIDE 100µSEC PERIOD
13	"	20	"	"	"	"	100µSEC WIDE 20µSEC PERIOD
14	"	10	MAIN	"	TYPE 40	A1 POT	CONTROLS L.O.
15	"	20	"	"	"	B1 POT	CONTROLS 11TH LEV L
16	"	20	FAST TRIGGER	"	CHECK	TRIGGER	SPACED 200µSEC

SECTION V

SCHEMATICS

SECTION V

SCHEMATICS

Block Diagram, 400
Power Supply P.C. Board, Signal Wiring, 400
Power Supply, 400
Front panel, 400
Time Switch, 400
Front Panel P.C., 400
Trigger Board, 400
Control Board, 400
Monitor P.C., 400
Ring Board, 400
Time Board, 400

Plug-in, Type 40

Plug-in, 4002
Plug-in, 4001 and 4003
Plug-in, 4001, 4003, 4005
Plug-in, 4005

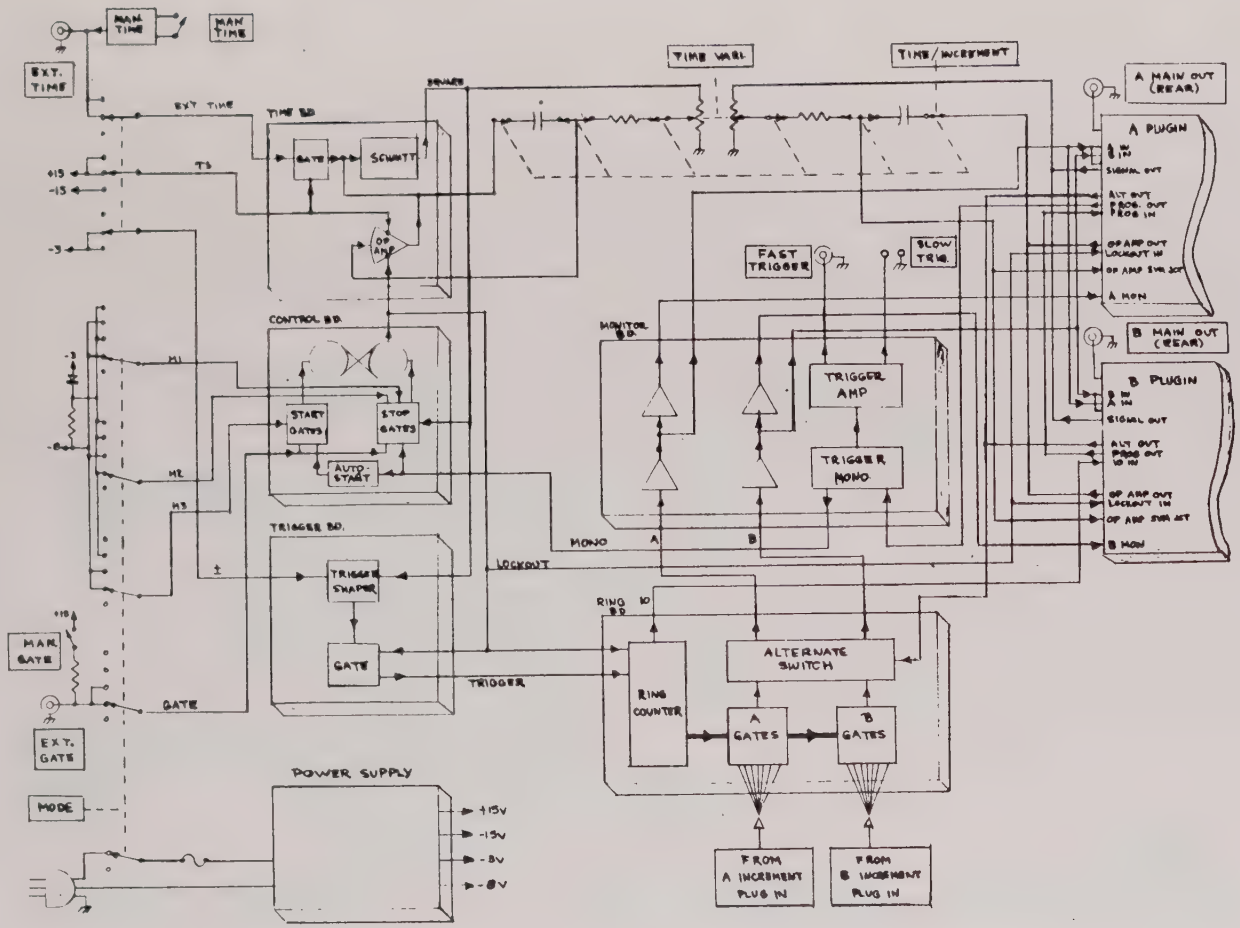

DATE	PTR	REVISION ORDERED	AUTH.	DR.	CK.

TOLERANCES (EXCEPT AS NOTED)			
DECIMAL ± —		SCALE —	DRAWN BY JDW APPROVED BY —
FRACTIONAL ± —	TITLE SCHEMATIC, BLOCK, 400		
ANGULAR ± —	DATE 3/30/67	DRAWING NUMBER	

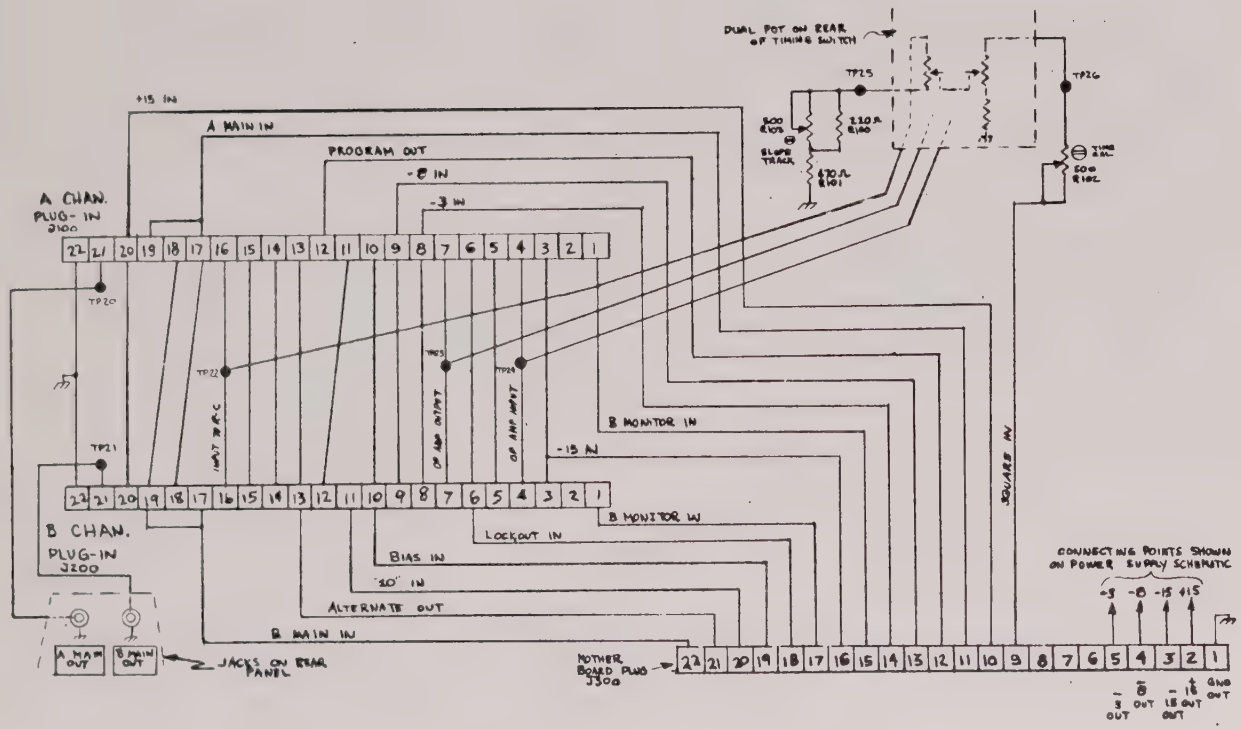

NOTE 1: SCHEMATIC IS IN SAME ORIENTATION AS REAR VIEW OF POWER SUPPLY P.C. BOARD

TOLERANCES (EXCEPT AS NOTED)			
DECIMAL ± ---		SCALE ——	DRAWN BY J DW / APPROVED BY J DW
FRACTIONAL ± --	TITLE SCHEMATIC, POWER SUPPLY P.C. BOARD SIGNAL WIRING, TYPE 400		
ANGULAR ±	DATE 6 April '67	DRAWING NUMBER	

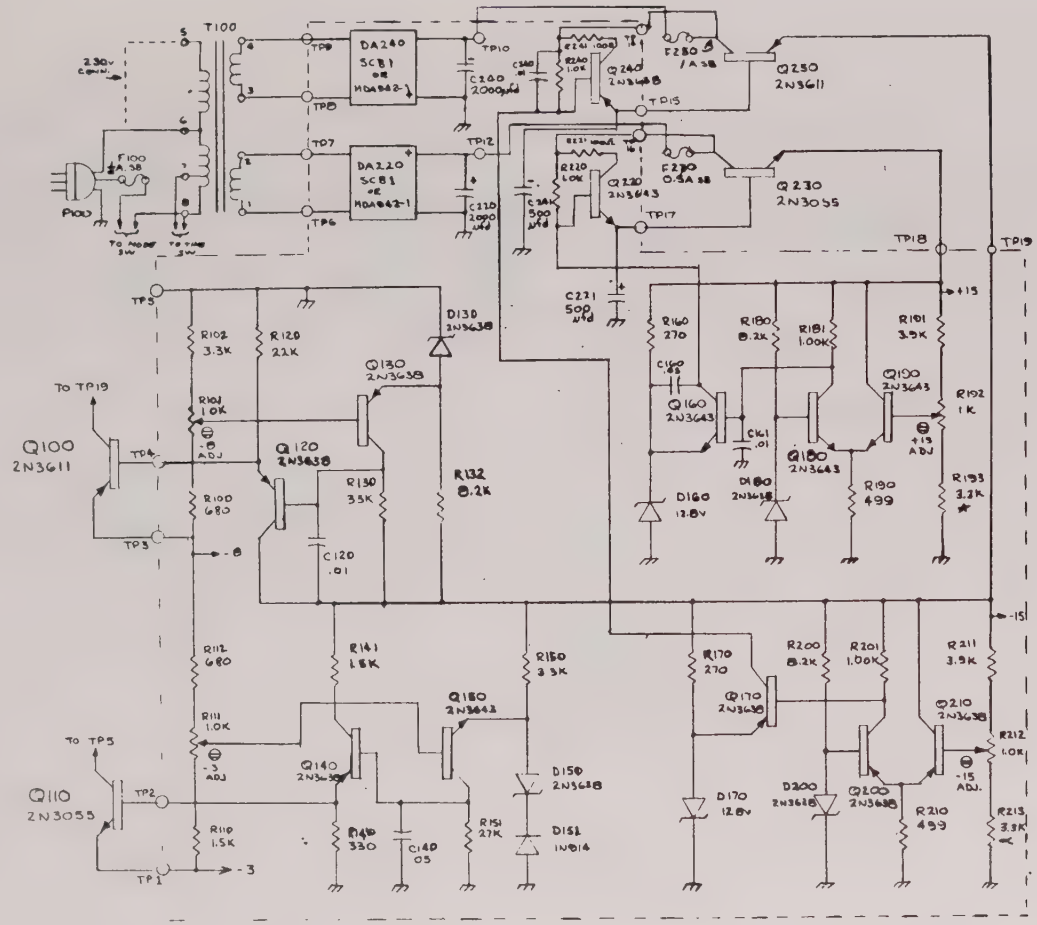

NOTE 4: F100 IS ¼A SB ON 230V.

NOTE 3: SEE POWER BD. WIRING SCHEMATIC FOR POWER OUTPUT CONNECTIONS.

NOTE 2: 2N3638 ZENERS USE EMITTER AS ANODE AND BASE OR COLLECTOR AS CATHODE

NOTE 1: ALL 2 DIGIT R'S = ½ W COMP: 3 DIGIT R'S = ½W MF. 1%

TOLERANCES (EXCEPT AS NOTED)			
DECIMAL ±		SCALE	DRAWN BY J DW / APPROVED BY J DW
FRACTIONAL ±	TITLE SCHEMATIC, POWER SUPPLY, 400		
ANGULAR ±	DATE APRIL 3, 67	DRAWING NUMBER	

DATE	SYM	REVISION RECORD	AUTH.	DR.	CK.
11-67		WIRING of TIME SOURCE			

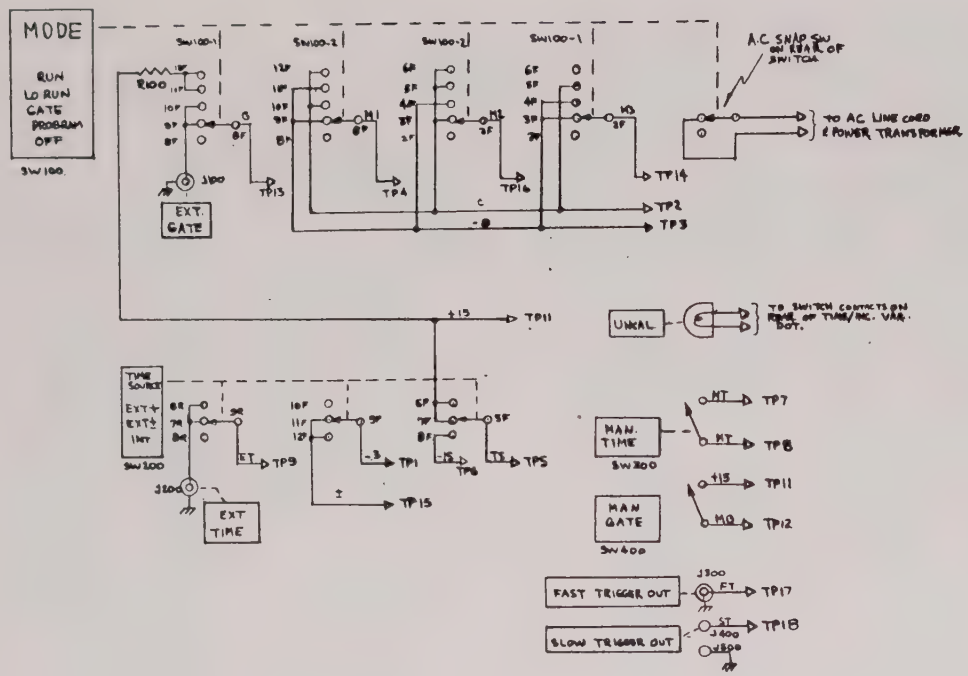

NOTE 1 ALL ARROWS (—▷) INDICATE CONNECTIONS TO FRONT PANEL PC UNLESS INDICATED OTHERWISE.

TOLERANCES (EXCEPT AS NOTED)			
DECIMAL ±		SCALE - -	DRAWN BY JDW / APPROVED BY JDW
FRACTIONAL ±	TITLE SCHEMATIC, FRONT PANEL, 400		
ANGULAR ±	DATE 6-22-67	DRAWING NUMBER	

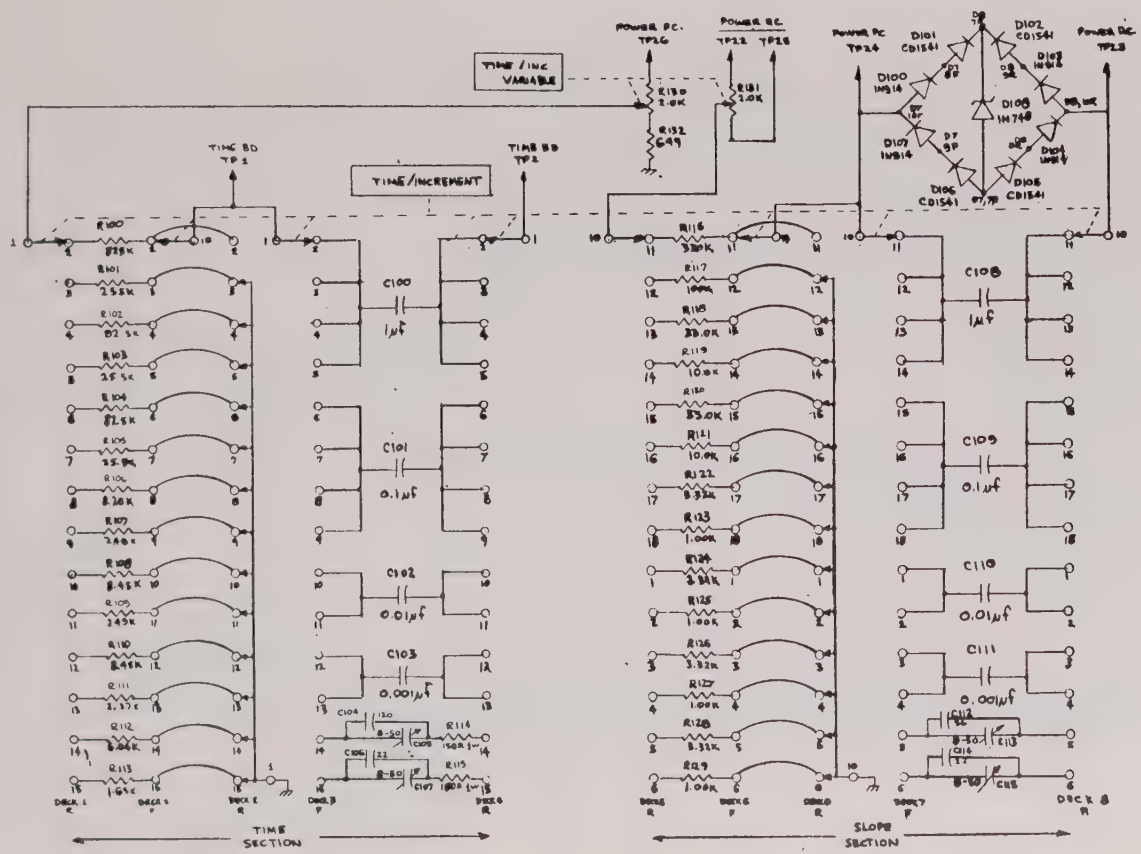

NOTE 1. ALL R'S ½W 1% MF UNLESS INDICATED OTHERWISE

TOLERANCES (EXCEPT AS NOTED)			
DECIMAL ± ——		SCALE ——	DRAWN BY JDW / APPROVED BY JDW
FRACTIONAL ± ——	TITLE SCHEMATIC, TIME SWITCH, 400		
ANGULAR ± ——	DATE 10 APRIL 67	DRAWING NUMBER	

DATE	SYM	REVISION RECORD	APPR.	CK.	CK.
[illegible]		Change R107 to 15K [illegible]	[illegible]		

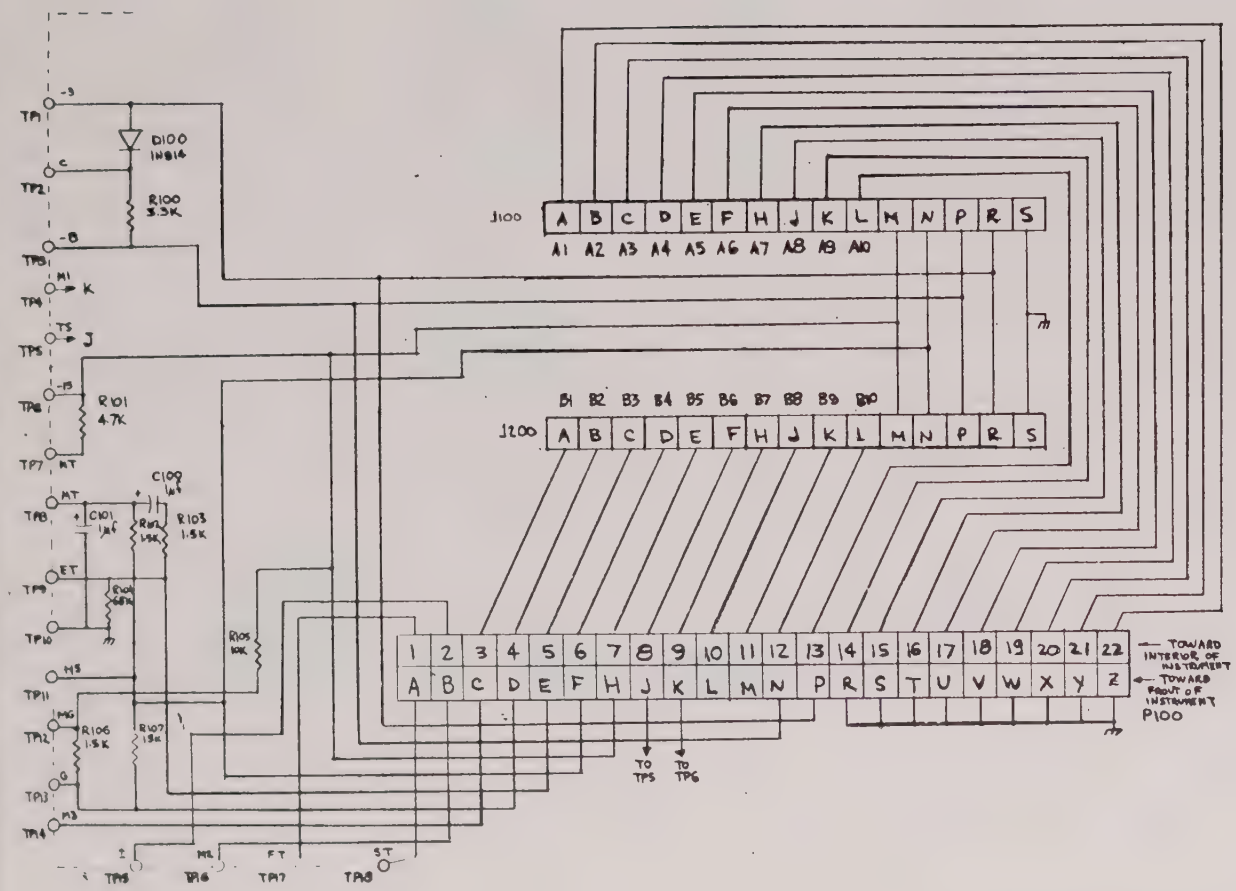

NOTE 1: SCHEMATIC IS ORIENTED SAME AS VIEW FROM INSTRUMENT INTERIOR

TOLERANCES (EXCEPT AS NOTED)			
DECIMAL ±		SCALE	DRAWN BY [illegible] / APPROVED BY [illegible]
FRACTIONAL ±	TITLE SCHEMATIC, FRONT PANEL P.C., 400		
ANGULAR ±	DATE 6 APRIL 67	DRAWING NUMBER	

DATE	SYM	REVISION RECORD	AUTH	DR	CK
[illegible]	[illegible]	[illegible]	[illegible]		

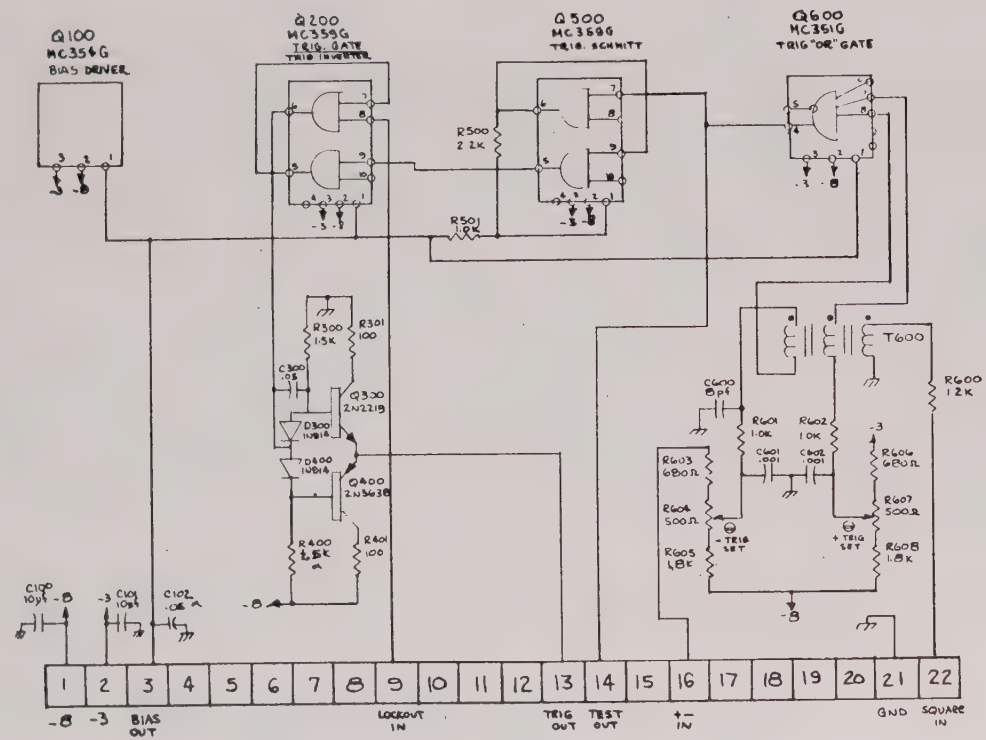

NOTE 1: I.C.'S NUMBERED C'W. FROM *1 (INDENTED) PIN.

TOLERANCES (EXCEPT AS NOTED)			
DECIMAL ±		SCALE —	DRAWN BY JDW / APPROVED BY JDW
FRACTIONAL ±	TITLE SCHEMATIC, TRIGGER BD, 400		
ANGULAR ±	DATE 5 APR 67	DRAWING NUMBER	

DATE	SYM	REVISION RECORD	AUTH	DR	CK

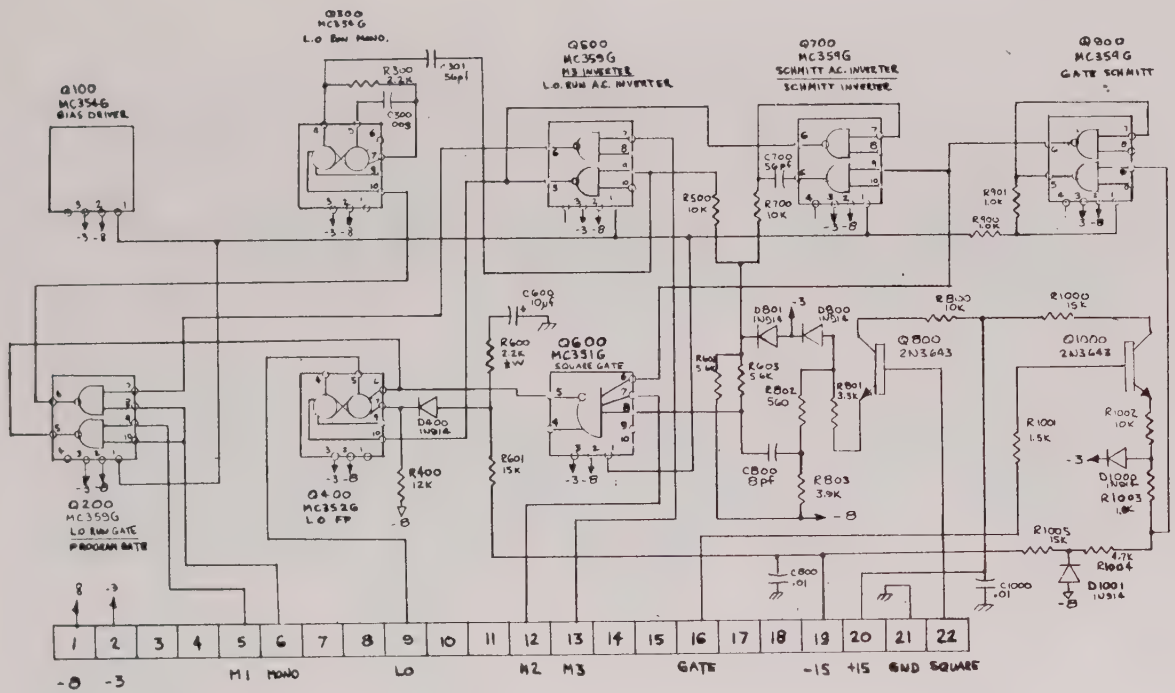

LOGIC TRUTH TABLES:

1 LEVEL ≈ -3.6V
0 LEVEL ≈ -4.4V

MC359G (GATES ARE INDEPENDENT)

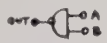

A	B	OUT
0	0	1
0	1	0
1	0	0
1	1	0

MC352G (R-S FLIPFLOP)

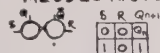

S	R	Q_{n+1}
0	0	Q_n
1	0	1
0	1	0
1	1	NG

MC351G (3 INPUT GATE)

A	B	C	F
0	0	0	1
0	0	1	0
0	1	0	0
1	0	0	0
0	1	1	0
1	0	1	0
1	1	0	0
1	1	1	0

NOTE 2: INTEGRATED CIRCUITS ARE NUMBERED C.W. WITH "INDENTED" PIN AS #1 (REAR VIEW)

NOTE 1: DIAGRAM IS ORIENTED SAME AS REAR VIEW of P.C. BOARD

TOLERANCES (EXCEPT AS NOTED)			
DECIMAL ± --		SCALE —	DRAWN BY DW / APPROVED BY DW
FRACTIONAL ± --	TITLE SCHEMATIC, CONTROL BD, 400		
ANGULAR ± -	DATE 4 APR 67	DRAWING NUMBER	

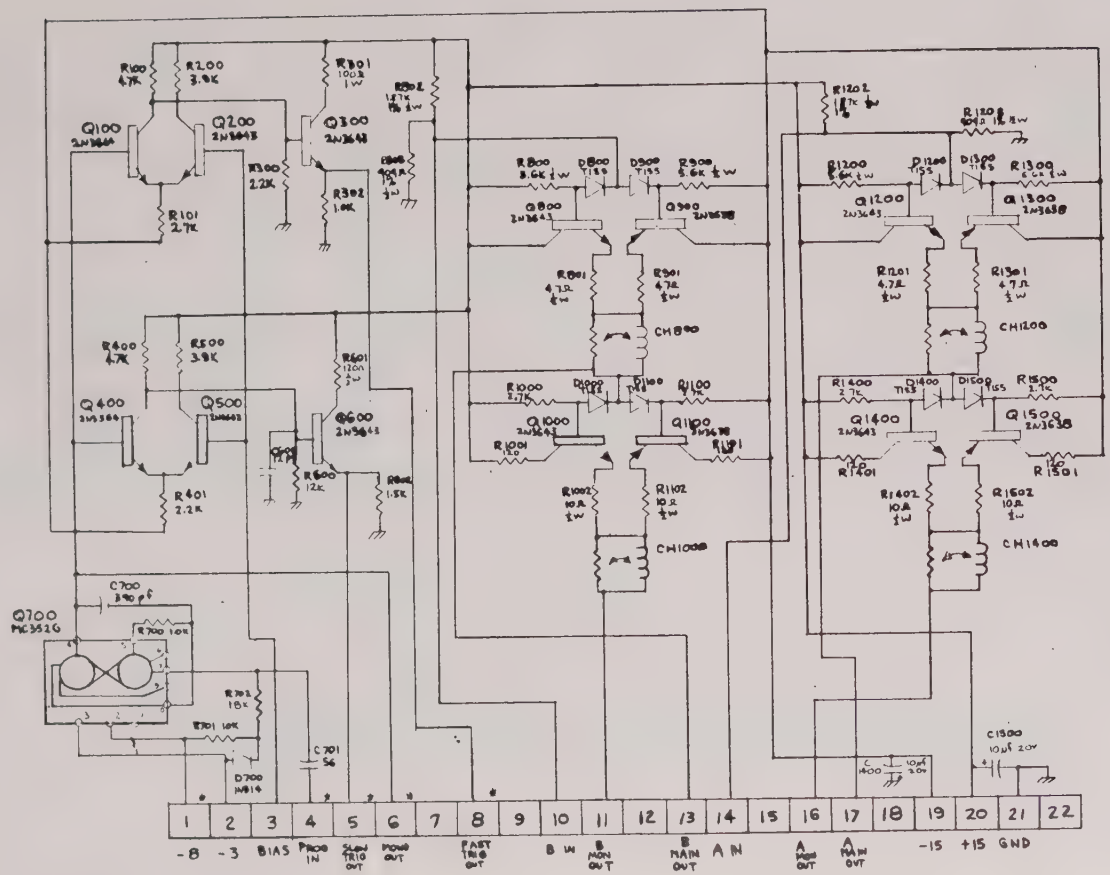

NOTE 2. IC PINS NUMBERED CW STARTING WITH #1 (INDENTED) PIN.

NOTE 1: ALL RESISTORS 1/4W UNLESS INDICATED OTHERWISE.

TOLERANCES (EXCEPT AS NOTED)			
DECIMAL ± ----		SCALE ----	DRAWN BY JDW / APPROVED BY JDW
FRACTIONAL ± ----	TITLE SCHEMATIC, MONITOR P.C., 400		
ANGULAR ±	DATE 5 APRIL 67	DRAWING NUMBER	

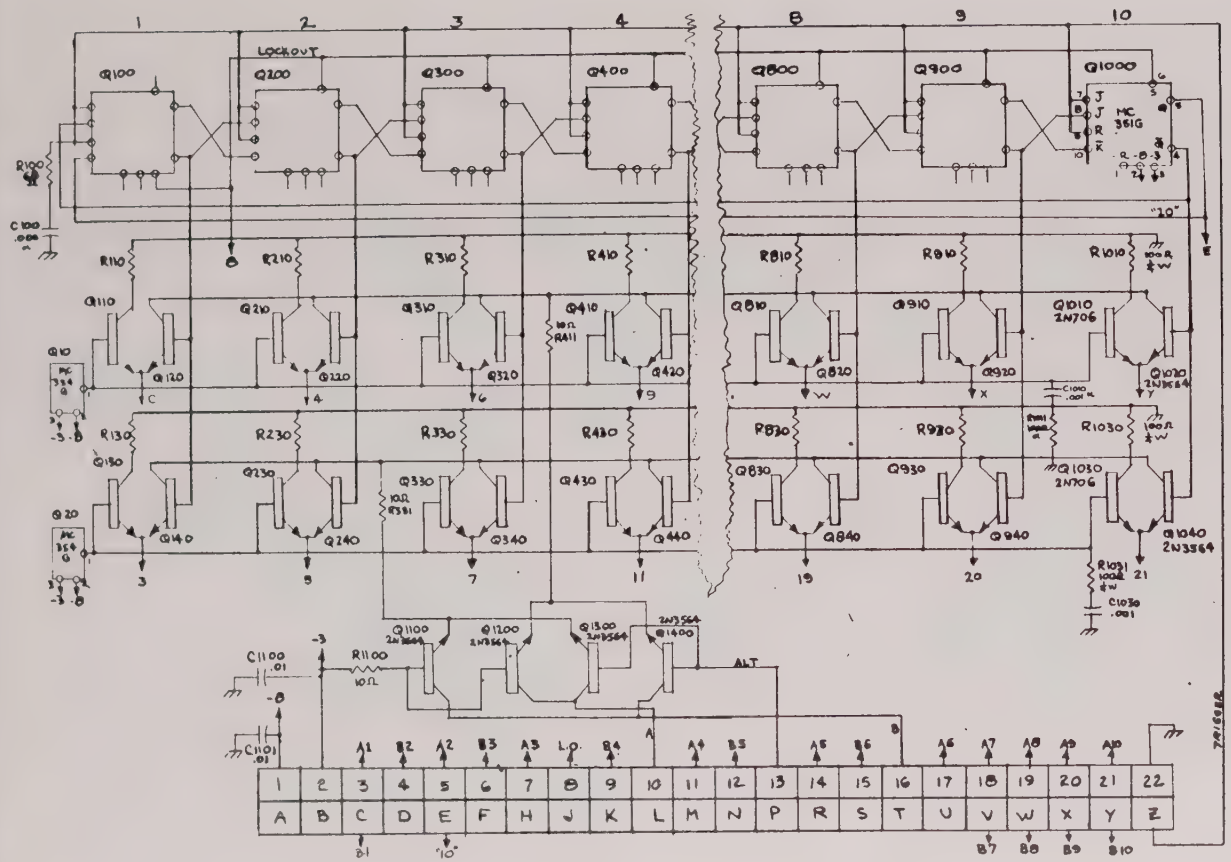

NOTE 3: Q110 & 120 THRU Q1010 & 1020 FORM "B" GATES
Q130 & 140 THRU Q1030 & 1040 FORM "A" GATES

NOTE 2: ALL Q100, 200, ETC MC3526; ALL Q110, 210, ETC & Q130, 230, ETC 2N706
ALL Q120, 220, ETC & Q140, 240, ETC 2N3564, ALL R110, 210 ETC & R130 230 ETC 100Ω ±W 10%

NOTE 1: ALL SECTIONS IDENTICAL TO SEC. 10 EXCEPT AS INDICATED

TOLERANCES (EXCEPT AS NOTED)			
DECIMAL ± ——		SCALE ——	DRAWN BY JDW / APPROVED BY JDW
FRACTIONAL ± ——	TITLE SCHEMATIC, RING BD, 400		
ANGULAR ± ——	DATE 4 APRIL 67	DRAWING NUMBER	

DATE	BY	REVISION RECORD	AUTH	DR	CK
17 Jan	CK	Change D1200, R1302	[illegible]		

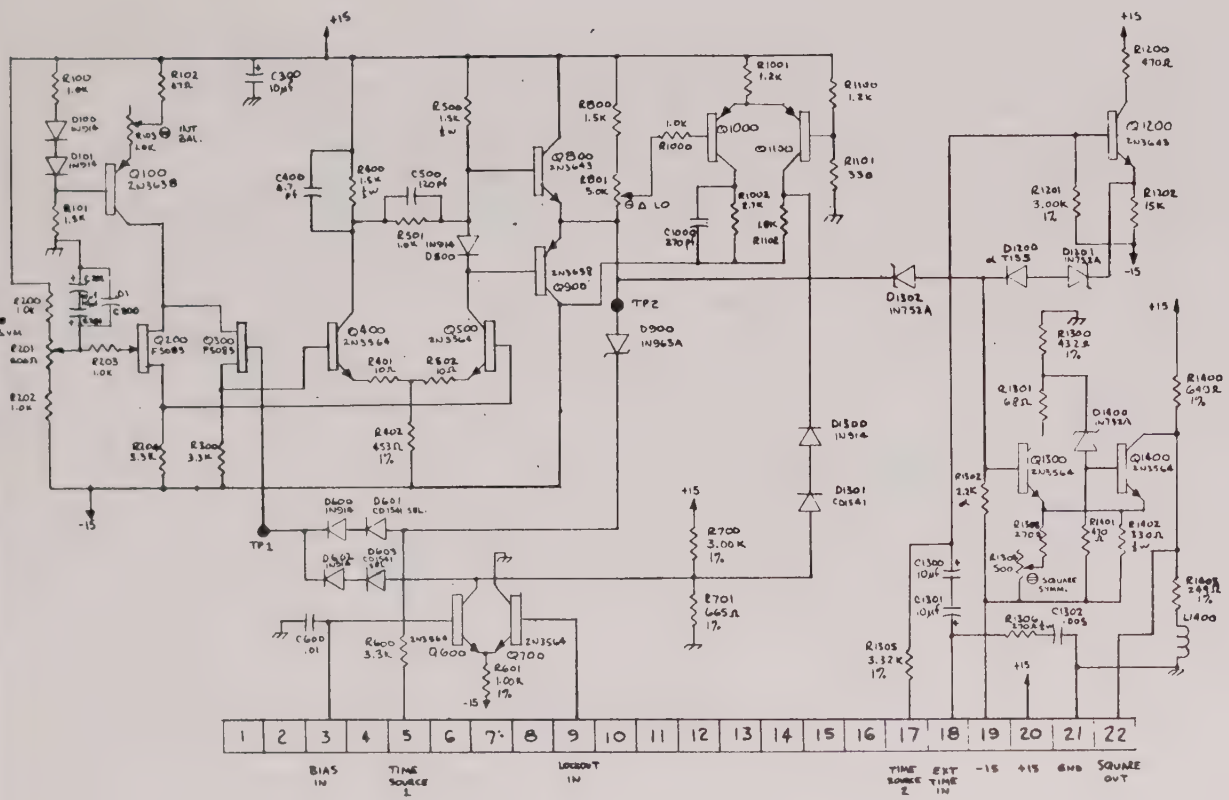

NOTE 5: L1400 IS 120-021

NOTE 4: D601 / D602 SELECTED (182-026)

NOTE 3: Q200 / Q300 - MATCHED PAIR (156-031)

NOTE 2: ALL R'S ½W COMP UNLESS SPECIFIED OTHERWISE

NOTE 1: ALL 1% R'S ½W MF

TOLERANCES (EXCEPT AS NOTED)			
DECIMAL ±		SCALE --	DRAWN BY [illegible] / APPROVED BY [illegible]
FRACTIONAL ±	TITLE SCHEMATIC, TIME BOARD, 400		
ANGULAR ±	DATE 11 APRIL 67	DRAWING NUMBER	

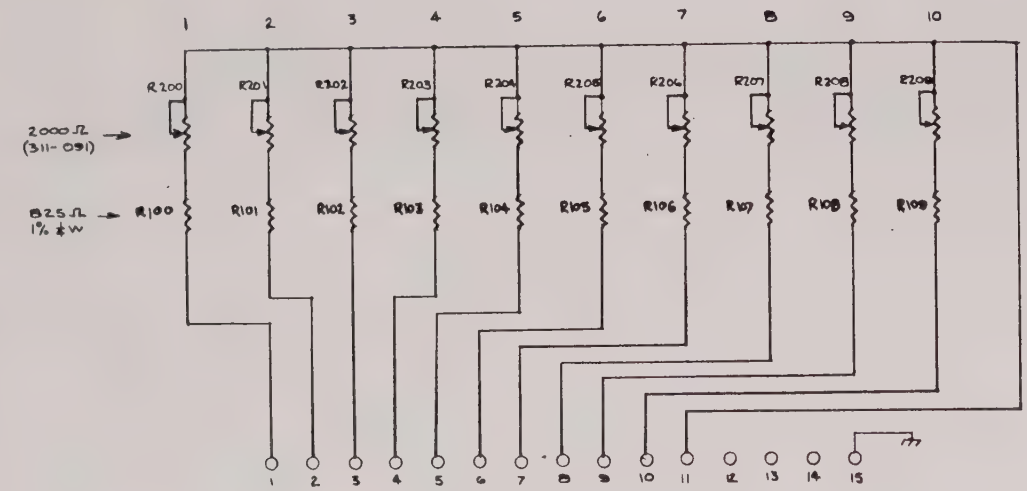

NOTE 2: POTENTIOMETERS NUMBERED L-R WHEN VIEWED FROM FRONT

NOTE 1: CONNECTOR IS NUMBERED L-R VIEWED FROM REAR

TOLERANCES (EXCEPT AS NOTED)			
DECIMAL ± —		SCALE —	DRAWN BY JDW / APPROVED BY JDW
FRACTIONAL ± —	TITLE SCHEMATIC, PLUGIN, TYPE 40		
ANGULAR ± —	DATE 3 APRIL 67	DRAWING NUMBER	

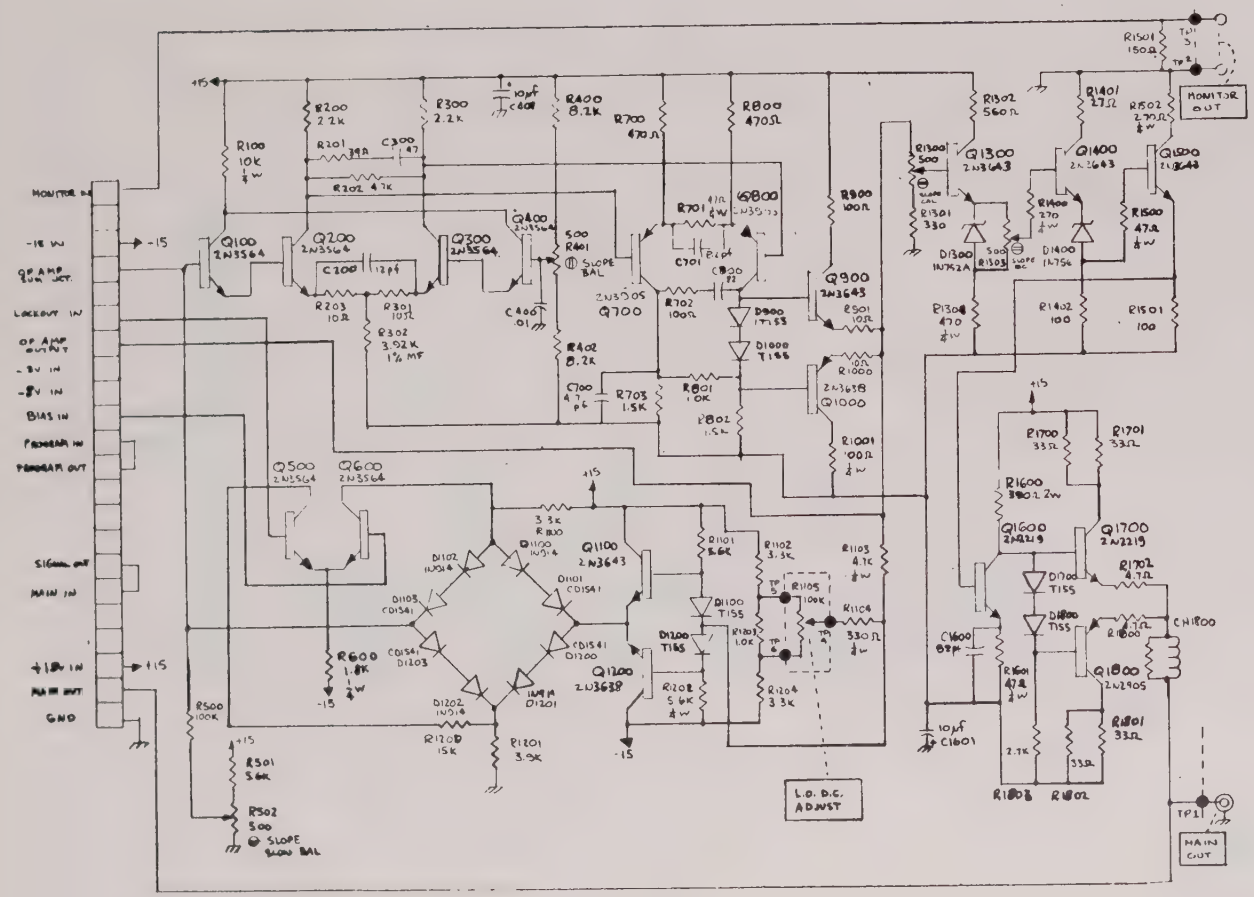

NOTE 2: THIS ASSY 999-264

NOTE 1: ALL RESISTORS ¼W COMP. UNLESS INDICATED OTHERWISE.

DATE	SYM	REVISION RECORD	AUTH	DR	CK

TOLERANCES (EXCEPT AS NOTED)			
ORIGINAL ±		SCALE —	DRAWN BY J.D.J. / APPROVED BY J.D.J.
FRACTIONAL ±	TITLE SCHEMATIC PLUG-IN 4002		
ANGULAR ±	DATE 10 APRIL 67	DRAWING NUMBER	

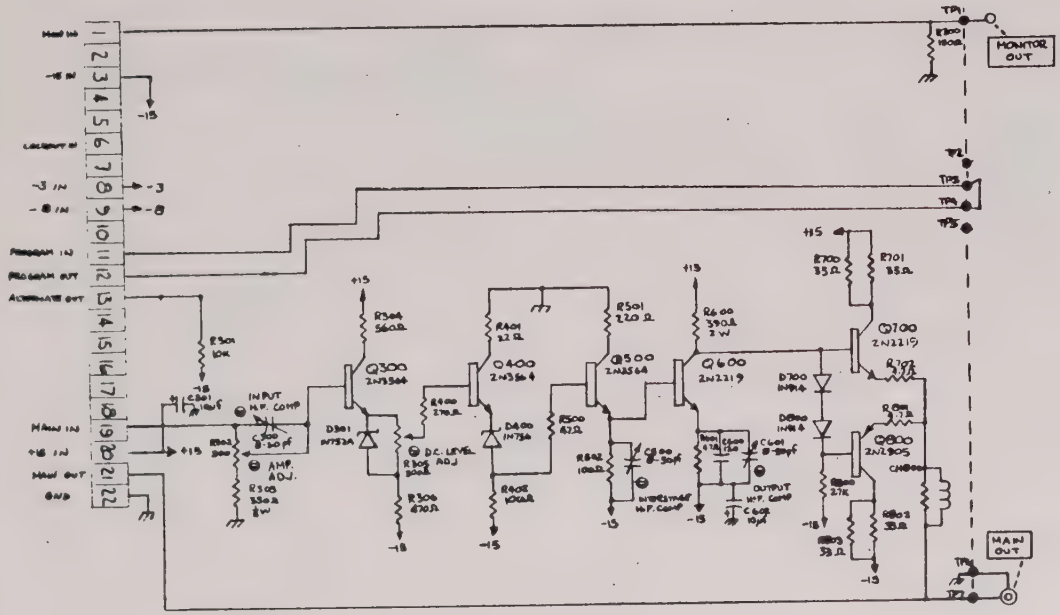

NOTE 1: ALL RESISTORS ½W UNLESS OTHERWISE INDICATED

TOLERANCES (EXCEPT AS NOTED)			
DECIMAL ±		SCALE -	DRAWN BY JDW / APPROVED BY JDW
FRACTIONAL ±	TITLE SCHEMATIC PLUG-IN		
ANGULAR ±	DATE 7 APRIL '67	DRAWING NUMBER	

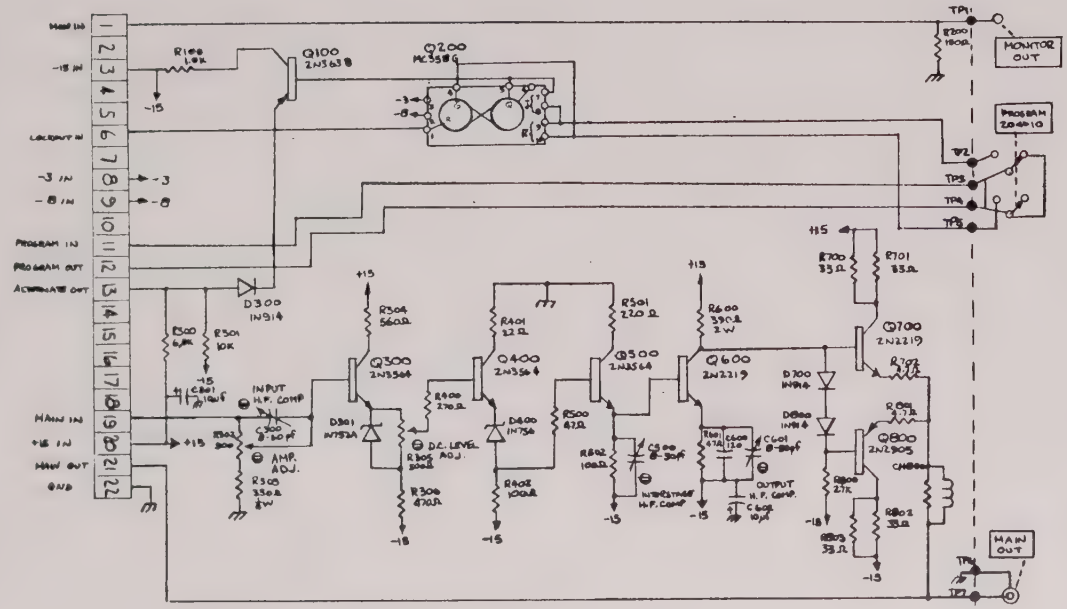

NOTE 2: THIS ASSY 999-262

NOTE 1: ALL RESISTORS 1/2W UNLESS OTHERWISE INDICATED

DATE	SYM	REVISION RECORD	AUTH	CK	CK

TOLERANCES (EXCEPT AS NOTED)			
DECIMAL ±		SCALE --	DRAWN BY JDW / APPROVED BY JDW
FRACTIONAL ±	TITLE SCHEMATIC PLUG-IN		4001 4003 4005 COMPARATOR
ANGULAR ±	DATE 7 APRIL '67	DRAWING NUMBER	

H+E ALBANENE ® NO CHARGE

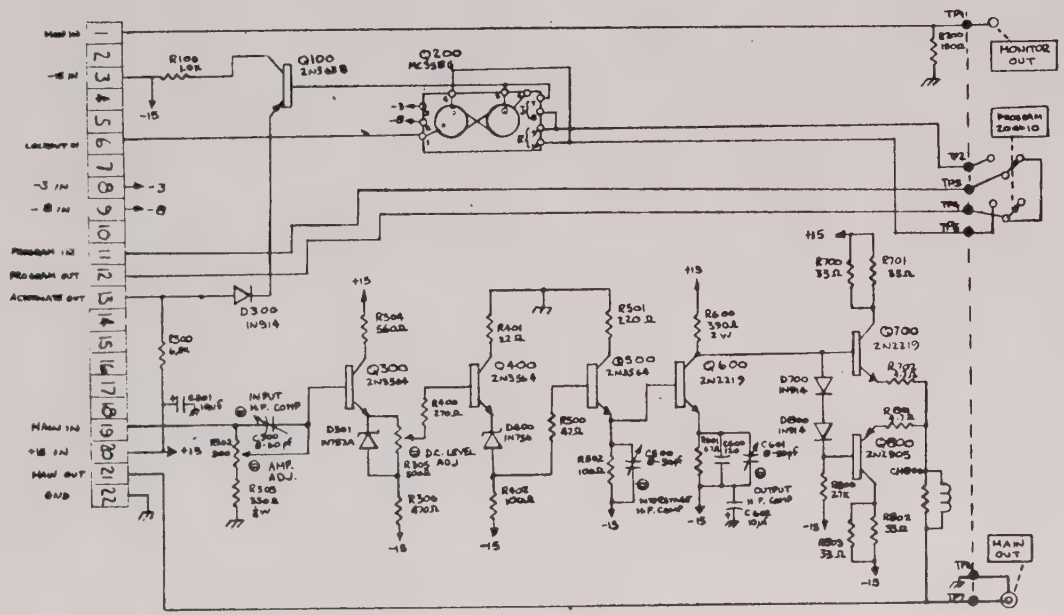

NOTE 1: ALL RESISTORS 1/2W UNLESS OTHERWISE INDICATED

DATE	SYM	REVISION RECORD	AUTH	DR.	CK.

TOLERANCES (EXCEPT AS NOTED)			
DECIMAL ±		SCALE —	DRAWN BY JDW / APPROVED BY JDW
FRACTIONAL ±	TITLE SCHEMATIC PLUG-IN 4005		
ANGULAR ±	DATE 7 APRIL '67	DRAWING NUMBER	

TYPE 400 PULSE APPLICATIONS

WITH CURRENTLY AVAILABLE PLUG-INS, THE TYPE 400 IS WELL SUITED FOR GENERATION OF TRAINS OF UNEQUAL AMPLITUDE PULSES. PROGRAMMERS WITH KNOB-ADJUSTABLE POTENTIOMETERS ALLOW SETTING THE AMPLITUDE INDEPENDENTLY FOR EACH PULSE IN THE TRAIN. A SEQUENCE OF TWENTY PULSES IS THE MAXIMUM BEFORE REPEATING THE PATTERN.

THE TYPE 400 HAS, IN EFFECT, A 100% DUTY CYCLE IN THAT EACH PULSE STARTS IMMEDIATELY AFTER THE PRECEDING ONE, WITH RETURNING TO A BASE LINE. THUS, TO GENERATE A TRAIN OF PULSES, ALTERNATE LEVELS MUST BE SET HIGH AND LOW; THE PERIOD BECOMES TWICE THAT INDICATED ON THE TIME/INCREMENT SWITCH.

EXAMPLES OF PULSE TRAIN APPLICATIONS INCLUDE TESTS ON PULSE HEIGHT DETECTORS AND PAM SYSTEMS, SIGNAL AMPLITUDE SENSITIVITY TESTS AT LOGIC INPUTS, LOGIC STIMULATION IN BOTH NRZ AND RZ SYSTEMS AND SIMPLE TESTS ON FERRITE SWITCH CORES. SUITABLE PLUG-INS FOR THESE APPLICATIONS INCLUDE 4001 (±5V OUT), 4003 (±10V OUT) AND 4005 (±5V AND 20 INCREMENTS).

PULSES OF NON-RECTANGULAR SHAPE MAY BE GENERATED BY COMBINING THE 400 WITH AN EXTERNAL GENERATOR. THE GENERATOR DETERMINES THE REPETITION RATE, WHILE THE 400 DETERMINES THE WIDTH AND SHAPE. THE PULSE, IN THIS CONFIGURATION, IS COMPOSED OF 10 (OR 20) CONNECTED SLOPES OF EQUAL WIDTH RETURNING TO THE BASELINE AT THE END OF THE PULSE.

APPLICATIONS INCLUDE SIMULATION OF BIOLOGICAL SIGNALS INCLUDING EKG, DRIVERS FOR SINGLE PULSE SHOCK TESTING AND MANY OTHER SIMILAR AREAS. APPROPRIATE PLUG-INS FOR THESE APPLICATIONS ARE 4002 SLOPE GENERATOR AND 4005 FOR 10 OR 20 INCREMENTS.

EXACT Electronics, Inc

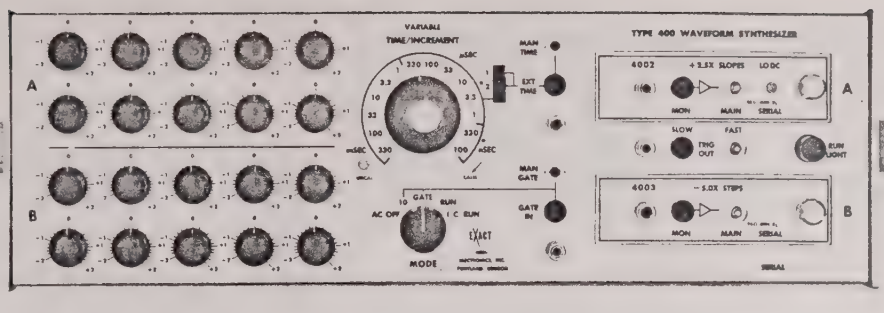

TYPE 400 SOLID STATE WAVEFORM SYNTHESIZER

THE LATEST COMPLEX INTEGRATED CIRCUIT GENERATOR

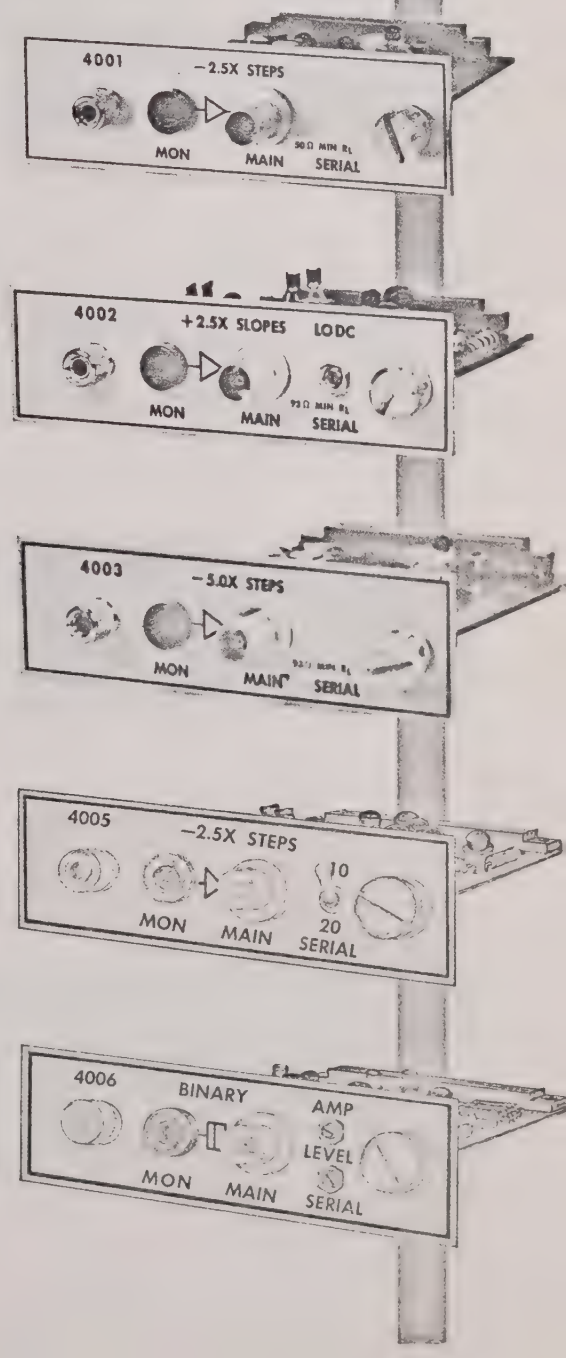

The new Exact TYPE 400 WAVEFORM SYNTHESIZER is capable of simulating an almost unlimited combination of signals covering a wide range of applications. The instrument features solid-state design, plug-in printed circuit construction (employing the latest integrated circuits), and compact packaging.

The Type 400 Generator produces two simultaneous but independent groups of variable DC levels. The basic outputs of the "400" are dual pulse trains whose individual amplitudes are sequentially switched at the rate determined by the timing clock. The various shapes and kinds of output signals are derived by means of printed-circuit board plug-in amplifier modules.

The Type 400 Generator is completely self contained and requires no auxiliary equipment or accessories. Clocking may be done internally or externally and may be free-run, gated or triggered to commutate a sequence of ten or twenty increments. A wide range of output signals can be derived from the 400, depending on which Exact 4000 series amplifiers are used.

ABOUT EXACT'S 400 WAVEFORM SYNTHESIZER

GENERAL:

The Type 400 complex Waveform Generator (Waveform Synthesizer) without plug-ins produces ±2 volt signals. The 400's twenty increment controls allow adjustment of one parameter each and are arranged in four rows of five controls per row. The rows may be selected to produce an output waveform consisting of ten or twenty increments.

By selecting a combination of the five available Plug-In Generators the function of the twenty controls can be chosen to produce:

(1) Dual output of ten independently controlled DC levels (pulses).

(2) Single output of ten independently controlled slopes in conjunction with any digital or binary type waveform.

(3) An output of twenty controlled slopes and an output of twenty controlled DC levels.

(4) Selection of output amplitudes ±5V, ±10V, etc.

(5) Dual output of binary words and either steps or slopes.

APPLICATIONS

The Waveform Synthesizer can produce an infinite variety of complex waveforms for almost all applications. A few proven applications follow: SHOCK-TABLE DRIVE—The Synthesizer can be used to drive vibration tables for shock testing and can be adjusted to compensate for inherent characteristics such as overshoot and ringing. The table can be forced to follow a desired function. HIGH-SPEED COMMUTATION—Used in multiple pulse train generation and digital computor checkout. SIMULATION OF HIGH SPEED TELEMETRY DATA—Up to twenty bits of telemetry data may be produced. Amplitudes and duration of simulated data can be varied to check marginal operation of telemetry equipment. WAVEFORM ANALYSIS AND DISTORTION STUDIES—Waveforms may be generated and modified, enabling the engineer to analyze design requirements or to evaluate the limits of existing circuits. COMPENSATION FOR DISTORTION OR NON-LINEARITY—Waveforms are used in the design or equipment to counteract distortion or non-linearity in amplifiers and in cases where compensating waveforms are required in operational equipment.

TRIGGERING:

The Type 400 with all plug-ins can be internally, externally or manually triggered, or gated, as follows:

(1) INTERNAL: The output waveforms recycle automatically.

(2) LOCKOUT RUN: Same as RUN except it provides a momentary DC clamp for slope waveform stability.

(3) TRIGGERED: Starts at first increment whenever Manual Gate is pressed or a Gate signal is present.

- (A) GATE: Stops at next even increment after gate signal is removed.
- (B) PROGRAM: Stops after ten or twenty increments depending on the plug-in used.

FREQUENCY AND TIMING:

Internal timing is calibrated in steps from 330 millisec to 100 nanosec per increment with a variable control allowing an increase of the time per increment to four times.

External timing is available in the following combinations:

(1) External (1): One increment each time input rises.
External (2): One increment each time input rises and one increment each time input falls.

(2) Manual (1): One increment each time button is pressed.
Manual (2): One increment each time button is pressed and one increment when button is released.

WARRANTY

All Exact Function Generators are fully warranted against defective materials or workmanship for one year. Responsible maintenance and repair centers are located in major cities throughout the world.

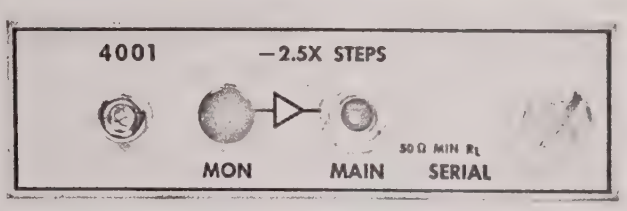

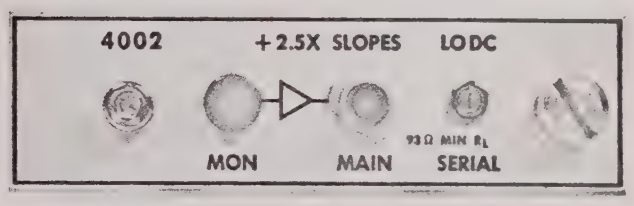

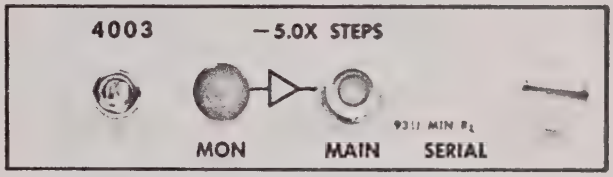

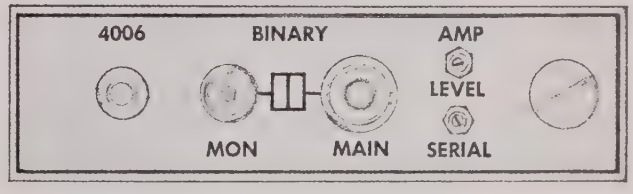

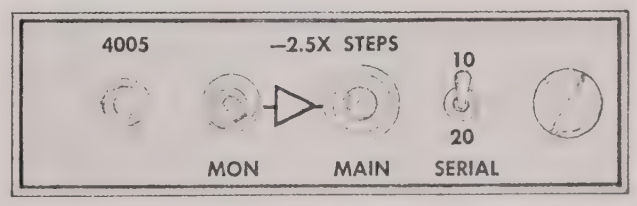

THE 4000 SERIES PLUG-IN GENERATORS

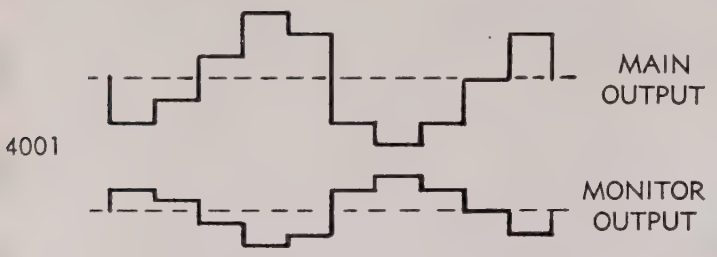

4001 Generates ten step levels or increments from −5 to +5 at the MAIN OUTPUT Jack and −2 to +2 volts at the MONITOR Jack.

The 4001 may be used in conjunction with any other 4000 series plug-in.

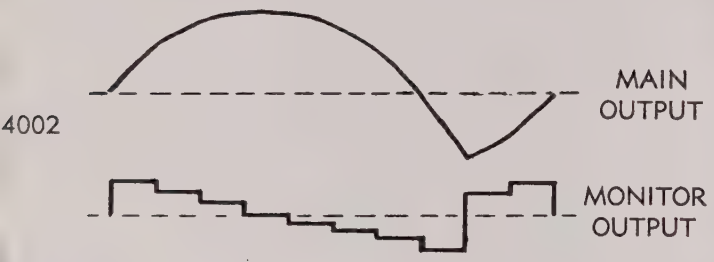

4002 Generates ten uninterrupted slopes from −10 to +10 volts at the MAIN OUTPUT Jack and −2 to +2 volt step levels or increments at the MONITOR Jack. The 4002 may be used in conjunction with any other 4000 series plug-in except another 4002.

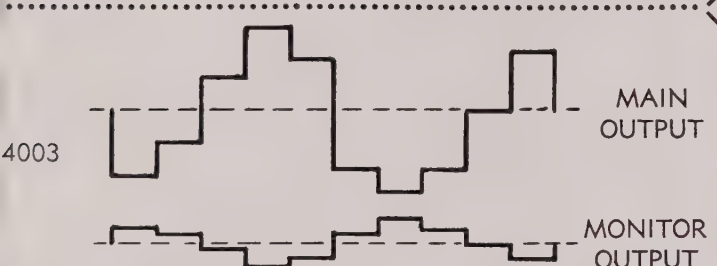

4003 Generates ten step levels or increments from −10 to +10 volts at the MAIN OUTPUT Jack and −2 to +2 volts at the MONITOR Jack. The 4003 may be used in conjunction with any other 4000 series plug-in.

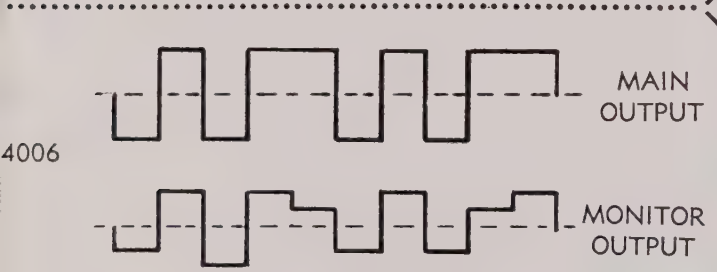

4006 Depending on setting of increment control, the 4006 generates ten binary bits at +4 or −4 at the MAIN OUTPUT Jack (amplitude and DC level are adjustable) and −2 to +2 volts at the MONITOR Jack.

May be used in conjunction with any 4000 series plug-in.

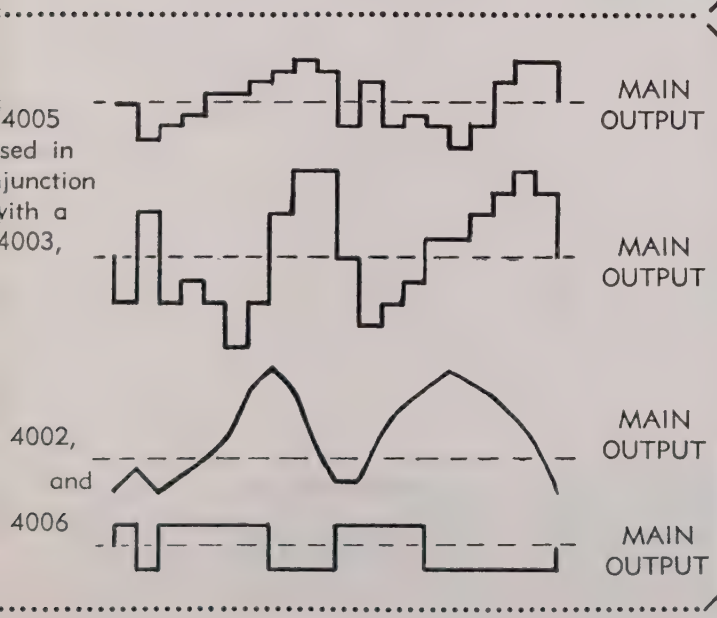

4005 This plug-in is unique in that the output waveform is not as significant as its switching capabilities with other plug-ins. The 4005 generates twenty steps or increments from −5 to +5 volts at the MAIN OUTPUT Jack and −2 to +2 volts at the MONITOR Jack. When used in conjunction with any other 4000 series plug-in, ten or twenty increments are produced by those plug-ins depending on the position of the switch located on the 4005 panel.

SPECIFICATIONS

TYPE 400 & PLUG-INS

PARAMETER	400	4001 STEPS	4002 SLOPES	4003 STEPS	4005 20 STEPS	4006 BINARY
MAIN OUTPUT						
Amplitude	3.75V Min P-P OC	10V P-P OC	20V P-P OC		10V P-P OC	4V P-P OC
Amplitude Control/ Calibrated Pots	Within ±200MV accuracy	Within 500mv accuracy	within 1 volt accuracy		Within 500mv accuracy	
Risetime and Falltime	20nsec or better	32nsec or better		35nsec or better	32nsec or better	5nsec or better
Gain	.94 x ±5%	2.5 x INV ±5%	2.5 x ±5%	5.0 x INV ±5%	2.5 x INV ±5%	
DC Level	OV ±100mv	OV ±250mv		OV ±500mv	OV ±250mv	ext. adj.
Deviation From Flatness	300mv (max.)			1 volt (max.)	300mv (max.)	200mv
TRIGGER OUTPUTS						
Fast	4V typically 100nsec rise and fall ½ usec wide					
Slow	10V typicaly 400nsec rise and fall ½ usec wide					
TIMING						
Width per increment	0.33 sec to 100nsec adjustable to 4X slower					
Accuracy (dial setting)	±5%					
Jitter	1% at 3.3ms or below ½% 1.0ms or above					
Ext. timing input voltage	3V P-P (min.) 10V P-P (max.); below 50CPS a square wave is necessary					
TRIGGERING						
Internal Run	Automatically recycles (free run)					
Program	One complete program for external or manual Gate (10 or 20 increments)					
Gate	Starts at #1 increment; stops at even increment after gate signal is removed.					
Lockout run	Automatically recycles continuously—Lockout between programs 40usec (typically)					
Gate characteristics	ON: +4V (max.) OFF +0V (min.)					
PHYSICAL CHARACTERISTICS						
Dimensions	17"W x 5½"H x 10½"D (41.5cm x 12.8cm x 25.5cm)	4.6"W x 1.3"H x 5.8"D (11.7cm x 4.3cm x 12.8cm)				
Weight	11 lbs. (5kg)	½ lb. (187g)				
PRICES F. O. B. FACTORY	400 **$1400.**	4001 **$95.**	4002 **$175.**	4003 **$110.**	4005 **$165.**	4006 **$110.**

EXACT Electronics, Inc

EXACT ELECTRONICS INC.
455 S.E. 2nd Avenue, Hillsboro, Oregon 97123
TELEPHONE (503) 648-6661 TWX: (503) 821-6927

PRINTED IN U.S.A.

SECTION II

CIRCUIT DESCRIPTION

SECTION II

CIRCUIT DESCRIPTION

TYPE 400

GENERAL

REFER TO THE BLOCK DIAGRAM.

THE TIME BOARD PROVIDES ALL TIMING SIGNALS FOR THE ENTIRE SYSTEM. THE TIME/INCREMENT SWITCH CONTROLS INTERNAL TIMING AND THE EXT TIME JACK AND MAN TIME BUTTON CONTROL EXTERNAL TIMING.

THE CONTROL BOARD PERFORMS THE LOGIC FUNCTIONS REQUIRED TO OPERATE IN THE SEVERAL MODES SELECTED BY THE MODE SWITCH.

THE TRIGGER BOARD CONVERTS THE TIMING SIGNAL FROM THE TIME BOARD INTO TRIGGERS SUITABLE FOR THE COUNTER CIRCUITRY ON THE RING BOARD.

THE RING BOARD PROVIDES THE BASIC WAVEFORM SYNTHESIS BY SELECTING, IN SEQUENCE, INPUTS FROM THE PROGRAMMING MODULES. IT ALSO PROVIDES THE BASIC TRIGGER AT THE END OF EACH TEN INCREMENTS.

THE MONITOR BOARD PROVIDES BUFFERS BETWEEN THE COUNTER AND THE OUTPUT PLUG-INS. ADDITIONALLY, IT CONTAINS CIRCUITRY TO CONVERT THE TRIGGER PULSE FROM THE RING BOARD INTO THE FAST AND SLOW TRIGGERS AVAILABLE AT THE FRONT PANEL.

THE FRONT PANEL BOARD CONTAINS CIRCUITRY FOR THE MAN. TIME AND MAN. GATE FUNCTIONS AND PROVIDES INTERCONNECTIONS FROM THE PROGRAMMER MODULES TO THE RING BOARD.

THE MOTHER BOARD PROVIDES INTERCONNECTIONS BETWEEN ALL P.C. BOARDS.

THE POWER SUPPLY BOARD CONTAINS THE POWER SUPPLY CIRCUITRY AND INTERCONNECTIONS TO THE OUTPUT PLUG-INS.

TIME BOARD

THE BASIC INTERNAL TIMING CIRCUITRY IS MADE UP OF ACTIVE INTEGRATOR AND A SCHMITT IN A CLOSED LOOP. Q1300 AND Q1400 MAKE UP THE SCHMITT AND Q100 THROUGH Q900 MAKE UP THE INTEGRATOR. THE TIME SWITCH SELECTS THE APPROPRIATE INTEGRATING COMPONENTS FOR THE INTEGRATOR.

TIME BOARD (CONTINUED)

THE LOCKOUT-RUN FUNCTIONS FOR THE MODES ARE SWITCHED BY Q600 AND Q700 DRIVEN BY THE CONTROL BOARD, D602, D603. D1300 AND D1301 PROVIDE A DC FEEDBACK PATH PAST THE TIMING CAPACITOR, DURING LOCKOUT, THROUGH THE LOCKOUT AMPLIFIER, Q1000 AND Q1100.

EXTERNAL TIME INPUT IS THROUGH Q1200 AND DRIVES THE SCHMITT INPUT.

CONTROL BOARD

THE BASIC CONTROL FUNCTION SUPPLIED TO THE OTHER BOARDS ON THE LOCKOUT BUS IS DRIVEN BY Q400, A FLIP-FLOP.

THE GATE INPUT IS SUPPLIED Q900, THE GATE SCHMITT, VIA Q1000. THE SCHMITT IS AC COUPLED TO Q400 VIA Q700 AND PROVIDES SIGNALS TO SWITCH Q400 TO THE RUNNING STATE.

COINCIDENCE OF MODE SWITCH INPUT, NO GATE SIGNAL AND TIMING SQUARE IS AC COUPLED THROUGH Q600 TO Q400 TO SWITCH Q400 TO LOCKOUT IN GATE MODE.

COINCIDENCE OF MODE SWITCH AND END OF PROGRAM PULSE (AS REGENERATED IN THE MONITOR BOARD) AT Q200 PROGRAM GATE WILL ALSO SWITCH Q400 TO LOCKOUT. THIS OCCURS IN PROGRAM MODE AND LOCKOUT RUN MODE.

COINCIDENCE OF MODE SWITCH AND END-OF-PROGRAM PULSE THROUGH Q200 LOCKOUT RUN GATE TRIGGERS Q300, THE LOCKOUT RUN MONOSTABLE. IT IS AC COUPLED THROUGH Q500 TO PROVIDE A STARTING PULSE TO Q400 APPROXIMATELY 15μSEC AFTER THE END OF PROGRAM PULSE.

THE TIMING SQUARE INPUT IS BUFFERED BY Q800, AND Q100 PROVIDES BIAS FOR THE LOGIC ELEMENTS ON THIS BOARD.

TRIGGER BOARD

THE TIMING SQUARE IS DIFFERENTIATED BY R600 AND THE PRIMARY OF T600. ONE SECONDARY PROVIDES AN INVERTED PULSE AND ONE A NON-INVERTED PULSE, TO Q600, AN OR GATE. THE OUTPUT OCCURS FROM THE GATE FOR EACH TRANSITION OF THE INPUT SQUARE.

THE TRIGGER SCHMITT, Q500, STANDARDIZES THE TRIGGER PULSES. Q200 PROVIDES TRIGGER GATING FOR EXTERNAL TIMING FUNCTIONS.

THE OUTPUT LINE DRIVER IS MADE UP OF Q300 AND Q400. Q100 PROVIDES BIAS FOR ALL LOGIC ELEMENTS ON THIS BOARD, THE TIME BOARD, AND OUTPUT PLUG-INS.

RING BOARD

THE BASIC SWITCHING CIRCUIT IS A SHIFT REGISTER CONNECTED AS A RING COUNTER. THE REGISTER ELEMENTS ARE J-K FLIP-FLOPS Q100, Q200, ETC., THROUGH Q1000.

EACH COUNTER ELEMENT DRIVES TWO GATES SIMULTANEOUSLY. EACH GATE IS MADE UP OF A DIFFERENTIAL PAIR WHICH SWITCHES THE EMITTER CURRENT OF THE PAIR AS SET BY THE PROGRAMMER MODULES. ONE GATE FROM EACH COUNTER ELEMENT IS CALLED AN "A" GATE; THE OTHER IS CALLED A "B" GATE.

THE OUTPUTS OF ALL A GATES ARE CONNECTED TOGETHER AND USUALLY DRIVE THE MONITOR BOARD THROUGH Q1200. THE B GATES ARE CONNECTED SIMILARLY AND DRIVE THE MONITOR BOARD THROUGH Q1100.

Q1300 AND Q1400 FORM CURRENT STEERING GATES RESPECTIVELY WITH Q1100 AND Q1200. IN THE PRESENCE OF A SIGNAL ON THE ALTERNATE LINE, THE B SIGNAL IS SWITCHED TO THE A OUTPUT AND THE A SIGNAL TO THE B OUTPUT.

Q10 AND +20 PROVIDE BIAS FOR THE A AND B GATES.

MONITOR BOARD

THE LOAD RESISTORS FOR THE SIGNAL OUTPUTS OF THE RING BOARD ARE LOCATED ON THE MONITOR BOARD.

EACH INPUT IS BUFFERED BY A COMPLEMENTARY EMITTER FOLLOWER. Q1200 AND Q1300 SERVE FOR THE A INPUT AND Q800 AND Q900 FOR THE B INPUT. THE OUTPUTS OF THESE ARE SENT TO THE SIGNAL INPUTS FOR THE A AND B PLUG-INS.

ADDITIONALLY, AFTER EACH INPUT BUFFER, A SECOND BUFFER IS USED. Q1400 AND Q1500 ARE FOR THE A CHANNEL AND Q100 AND Q1100 FOR THE B CHANNEL. THESE DRIVE THE MONITOR OUTPUTS ON THE OUTPUT PLUG-INS.

THE END-OF-PROGRAM PULSE IS CONVERTED TO A 0.5μSEC PULSE VIA Q700, OPERATED AS A MONOSTABLE. THE MONOSTABLE DRIVES TWO SWITCHES; ONE SWITCH, Q400 AND Q500, PROVIDES THE SLOW TRIGGER SIGNAL THROUGH Q600. THE OTHER SWITCH, Q100 AND Q200, PROVIDES THE FAST TRIGGER THROUGH Q300. THESE TRIGGERS ARE CONNECTED TO JACKS ON THE FRONT PANEL.

POWER BOARD

ALL INSTRUMENT POWER REGULATORS ARE LOCATED ON THE POWER BOARD. POWER IS SUPPLIED FROM THE POWER TRANSFORMER, T100, LOCATED ON THE REAR CHASSIS.

POWER BOARD (CONTINUED)

THE +15 REGULATOR IS MADE UP OF Q160, Q180, Q190, Q220 AND Q230. THE LATTER IS LOCATED ON THE REAR CHASSIS.

THE -15 REGULATOR IS COMPOSED OF Q170, Q200, Q210, Q240 AND Q250. THE LATTER IS ON THE REAR CHASSIS.

THE -8 SUPPLY IS MADE UP OF Q130, Q120 AND Q100. Q100 IS LOCATED ON THE REAR CHASSIS.

THE -3 SUPPLY IS REFERENCED BETWEEN THE -8 SUPPLY AND GROUND. IT IS MADE UP OF Q150, Q140 AND Q110. Q110 IS LOCATED ON THE REAR CHASSIS.

PROGRAMMER PLUG-INS

GENERAL

ALL PLUG-INS OPERATE BY CONTROLLING CURRENT THROUGH THE GATE ON THE RING BOARD. CURRENT MAY BE CONTROLLED SEVERAL WAYS INCLUDING RESISTORS AND TRANSISTOR CURRENT SOURCES.

TYPE 40

THIS PROGRAMMER CONTAINS 40 POTENTIOMETERS CONNECTED AS RHEOSTATS. EACH HAS A SERIES LIMITING RESISTOR AND -15V IS SUPPLIED TO ONE END OF EACH. THE OTHER END IS CONNECTED TO THE APPROPRIATE GATES ON THE RING BOARD.

OUTPUT PLUG-INS

GENERAL

ALL PLUG-INS RECEIVE THE BASIC SIGNAL FROM THE MAIN BUFFERS ON THE MONITOR BOARD. ADDITIONALLY, EACH PLUG-IN HAS A JACK CONNECTED DIRECTLY TO THE MONITOR BUFFERS ON THE MONITOR BOARD.

EACH PLUG-IN HAS THE CAPABILITY OF CONTROLLING THE ALTERNATE SWITCH ON THE RING BOARD. EACH ALSO RECEIVES THE END-OF-PROGRAM PULSE FROM THE RING BOARD AND SUPPLIES IT TO THE MONITOR BOARD.

4001 AND 4003

THESE PLUG-INS ARE IDENTICAL EXCEPT FOR CALIBRATION. Q300 RECEIVES THE ATTENUATED INPUT SIGNAL AND DRIVES THE DC LEVEL CIRCUIT, D301 AND R305. Q400 AND D400 PROVIDE ADDITIONAL OFFSET TO Q500. Q500 DRIVES THE GAIN STAGE, Q600.

4001 AND 4003 (CONTINUED)

AN OUTPUT BUFFER IS MADE UP OF Q700 AND Q800.

THE END-OF-PROGRAM PULSE IS SHUNTED DIRECTLY OUT TO THE MONITOR BOARD.

4002

THE 4002 CONNECTS THE MAIN SIGNAL FROM THE MONITOR BOARD TO THE TIMING RESISTORS ON THE REAR SECTION OF THE TIMING SWITCH. THE TIMING CAPACITORS ON THE REAR SECTION AND THE OPERATIONAL AMPLIFIER IN THE 4002 PRODUCE AN ACTIVE INTEGRATOR WHICH TRANSFORMS THE INPUT SIGNAL INTO A CONTINUOUS SLOPING WAVEFORM.

THE OPERATIONAL AMPLIFIER IS MADE UP OF Q100-Q400 AND Q700-Q1000.

THE OUTPUT OF THE INTEGRATOR IS AMPLIFIED BY A CIRCUIT IDENTICAL TO THAT IN THE 4001. Q1300-Q1500 MAKE UP THIS CIRCUIT.

THE LOCKOUT SIGNAL FROM THE CONTROL BOARD DRIVES Q500, WHICH, TOGETHER WITH Q600, SWITCHES THE DIODE BRIDGE COMPOSED OF D1100-D1103 AND D1200-D1203. THE BRIDGE PROVIDES A DC FEEDBACK PATH PAST THE TIMING CAPACITOR DURING LOCKOUT FOR CLAMPING. THE LOCKOUT OFFSET CIRCUIT CONTROLLED BY R1105 FEEDS THE INTEGRATOR OUTPUT THROUGH Q1100 AND Q1200, A BUFFER, TO THE CLAMPING BRIDGE.

4005

THE AMPLIFIER CIRCUIT ON THE 4005 IS IDENTICAL TO THAT ON THE 4001.

THE END-OF-PROGRAM PULSE IS SWITCHED BY THE PROGRAM SWITCH. IN "10" IT IS SENT DIRECTLY TO THE MONITOR BOARD. IN "20" IT TRIGGERS Q200, A J-K FLIP-FLOP AND THE FLIP-FLOP OUTPUT IS SENT TO THE MONITOR BOARD.

THE FLIP-FLOP ALSO DRIVES Q100 WHICH PROVIDES A SIGNAL TO THE RING BOARD ON THE ALTERNATE LINE.

SECTION III

OPERATING INSTRUCTIONS

SECTION III

OPERATING INSTRUCTIONS

TYPE 400

GENERAL INFORMATION

THIS SECTION OF THE MANUAL GIVES INFORMATION CONCERNING OPERATION AND APPLICATION OF THE TYPE 400 WAVEFORM SYNTHESIZER WITH 4000 SERIES OUTPUT MODULES AND 40 SERIES INCREMENT MODULES.

INSTALLATION

THE TYPE 400 IS A COMPLETE MECHANICAL PACKAGE AND REQUIRES NO MECHANICAL PREPARATION FOR DESK USE. RACKMOUNTING MAY BE ACCOMPLISHED WITH RACKMOUNT ADAPTERS (AVAILABLE FROM EXACT). THE ADAPTERS ARE MOUNTED USING THREE SCREWS THROUGH THE PREPARED HOLES IN EACH SIDE OF THE CABINET.

OUTPUT MODULES ARE REMOVED BY UNSCREWING THE TURN-LOCKS ON THEIR PANELS. THE MODULE IS THEN DISENGAGED SUFFICIENTLY TO BE EASILY REMOVED. MODULES ARE INSERTED IN THE REVERSE PROCEDURE. MAKE CERTAIN THAT BOTH EDGES OF THE CIRCUIT BOARD ARE IN THE GUIDES AS THE MODULE IS INSERTED.

PROGRAM MODULES ARE EACH SECURED BY A PAIR OF SPRING CLIPS. A STRAIGHT PULL WILL DISENGAGE THE MODULES. CARE IN INSTALLING THE MODULES IS SUGGESTED.

COOLING

CONVECTION PROVIDES COOLING. MAKE CERTAIN THAT NOTHING BLOCKS THE VENTILATION HOLES IN THE TOP AND BOTTOM OF THE CABINET. AMBIENT TEMPERATURE SHOULD NOT EXCEED 40°C. (100°F.)

FRONT PANEL CONTROLS

THE FRONT PANEL CONTAINS ALL CONTROLS AND CONNECTORS NECESSARY FOR NORMAL USE OF A 400 WAVEFORM SYNTHESIZER AND ITS MODULES. IN ORDER TO USE THE INSTRUMENT INTELLIGENTLY AND TO THE LIMITS OF ITS CAPABILITY, THE OPERATOR MUST BE FAMILIAR WITH THE USE OF THE CONTROLS. THE FOLLOWING PARAGRAPHS DESCRIBE EACH CONTROL. FURTHER INFORMATION USEFUL FOR OPERATION IS CONTAINED UNDER APPROPRIATE HEADINGS.

TABLE 3-1

TIMING SYSTEM

TIME/INCREMENT	SWITCH SELECTS CALIBRATED VALUES OF INCREMENT TIME FROM 100NS TO 330MSEC. TIME IS CALIBRATED ONLY WHEN TIME SOURCE (LEVER) SWITCH IS IN INT POSITION AND THE TIME/INCREMENT VARIABLE IS IN THE CALIBRATED POSITION.
TIME/INCREMENT VARIABLE	CONTROL VARIES INTERNAL TIMING TO AT LEAST FOUR TIMES SLOWER THAN THE TIME SET BY TIME/INCREMENT SWITCH.
TIME SOURCE	SWITCH SELECTS INTERNAL TIMING OR ONE OF TWO EXTERNAL TIMING CONDITIONS. IN THE "+" POSITION, ONE INCREMENT IS GENERATED FOR EACH CYCLE OF EXTERNAL TIMING SIGNAL; INCREMENTS ARE SWITCHED ON THE POSITIVE SLOPE OF THE INPUT WAVEFORM. IN THE "±" POSITION, TWO INCREMENTS ARE GENERATED FOR EACH CYCLE OF EXTERNAL TIME SIGNAL, SWITCHING INCREMENTS ON BOTH POSITIVE AND NEGATIVE SLOPES. 5V MAXIMUM INPUT.
EXT. TIME	JACK. INPUT FOR EXTERNAL TIMING SIGNALS.
MAN. TIME	BUTTON FUNCTIONS WHEN TIME SOURCE SWITCH IS IN EITHER OF THE EXTERNAL POSITIONS. IN "+" POSITION OF TIME SOURCE SWITCH, PRESSING MAN TIME STEPS TIMING ONE INCREMENT. IN "±" POSITION, THE INCREMENT STEPS ONCE EACH TIME BUTTON IS EITHER PRESSED OR RELEASED.
MODE	SWITCH SELECTS FOUR MODES: PROGRAM - TIMING RUNS FOR TEN OR TWENTY INCREMENTS TRIGGERED BY MAN GATE BUTTON OR EXT GATE SIGNAL; GATE - TIMING GATED ON AND OFF BY MAN GATE BUTTON OR EXT GATE SIGNAL; L.O. RUN - SPECIAL STABILIZED RUN FOR SLOPE GENERATION; RUN - TIMING RUNS WITHOUT REGARD TO GATE SIGNALS.
EXT GATE	JACK. INPUT FOR GATING SIGNALS; ALSO PROVIDES TRIGGERING FOR PROGRAM MODE. ±10V MAXIMUM INPUT.
MAN GATE	BUTTON PROVIDES MANUAL GATE FOR GATE MODE OR MANUAL TRIGGER FOR PROGRAM MODE.

SIGNAL SYSTEM

FAST TRIGGER	JACK. 4V TRIGGER AT END OF EACH PROGRAM CAPABLE OF DRIVING 50 OHMS.
SLOW TRIGGER	JACK. 10V TRIGGER COINCIDENT WITH FAST TRIGGER. SLOW RISE AND FALL FOR UNTERMINATED SYSTEMS.
MONITOR	JACK LOCATED ON EACH OUTPUT MODULE MONITORS INPUT TO THAT MODULE.

FIRST TIME OPERATION

THE STEPS BELOW REQUIRE THE FOLLOWING EQUIPMENT IN ADDITION TO THE TYPE 400.

OSCILLOSCOPE -	TEKTRONIX TYPE 580 OR EQUIVALENT FAST RISE-TIME SCOPE. SLOWER OSCILLOSCOPE WILL NOT PROVIDE ADEQUATE FAST TIMING RANGES. DUAL CHANNEL CAPABILITY WILL BE ASSUMED.
GENERATOR	EXACT TYPE 301 OR EQUIVALENT CAPABLE OF PROVIDING +5V INTO 3K. IF THE GENERATOR HAS FAST RISE AND FALL TIMES, IT SHOULD BE OPERATED AS A TERMINATED GENERATOR.

THE FIRST SIX STEPS WILL DETAIL SETTING UP THE GENERATOR, SCOPE, AND SYNTHESIZER WHILE THE REMAINDER EXPLAIN OPERATING DETAILS.

1. WITH 400 MODE SWITCH TURNED TO PWR OFF, INSERT ANY TWO PLUG-INS INTO THE 400. SEE INSTALLATION, P. 3-1. IF A 4005 PLUG-IN IS USED, THE PROGRAM SWITCH MUST BE IN 10 POSITION. ALSO INSERT TWO TYPE 40 PROGRAMMERS.

2. CONNECT 301 FUNCTION GENERATOR VIA TERMINATED 50 OHM CABLE TO EXT GATE JACK ON 400.

3. CONNECT CHANNEL 1 OF THE SCOPE VIA 10X PROBE TO CHAN A MON JACK AND CONNECT CHANNEL 2 OF THE SCOPE VIA CHAN B MON JACK.

4. CONNECT VIA BANANA PATCH CORD FROM 301 TRIGGER OUT TO SCOPE TRIGGER INPUT.

5. SET CONTROLS AS FOLLOWS:

FIRST TIME OPERATION (5) CONTINUED

SCOPE

VOLTS/CM	.2 BOTH CHANNELS
VOLTS/CM VAR	CAL
MODE	ALTERNATE
TIME/CM	2μSEC/CM
TIME/CM VAR	CAL
TRIGGER	+ EXT
A.C. POWER	ON

301 FUNCTION GENERATOR

FREQUENCY DIAL	4.0
FREQUENCY MULT	10KC
TRIGGER	INT
AC POWER	ON
OUTPUT SELECTOR	SQUARE
OUTPUT AMPLITUDE	MAX

400 SYNTHESIZER

TIME/INCREMENT	1μSEC			
TIME/INC VAR	CAL			
TIME SOURCE	INT			
A INCREMENT POTS	1.	+	6.	0
	2.	¾+	7.	¼−
	3.	½+	8.	½−
	4.	¼+	9.	¾−
	5.	0	10.	−
B INCREMENT POTS	1.	−	6.	0
	2.	¾−	7.	¼+
	3.	½−	8.	¼+
	4.	¼−	9.	¾+
	5.	0	10.	+

6. WITH SCOPE STABILITY SET TO FREE RUN, SET CHAN. 1 TRACE TO CENTER OF UPPER HALF OF SCREEN AND CHAN. 2 TRACE TO CENTER OF LOWER HALF OF SCREEN.

7. SET 400 MODE SWITCH TO PROGRAM.

8. ADJUST SCOPE STABILITY FOR STABLE DISPLAY AS SHOWN IN FIG. 3.1.

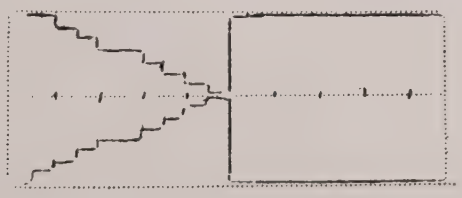

FIG. 3.1. OSCILLOSCOPE DISPLAY OF PROGRAM MODE.

9. TURN CHAN A INCREMENT #1 KNOB. NOTE THAT BOTH THE FIRST INCREMENT AND THE LEVEL FOLLOWING THE TENTH INCREMENT CHANGE SIMULTANEOUSLY AND ARE AT THE SAME VOLTAGE. RETURN A1 POT TO +.

10. INCREASE GATE SIGNAL FREQUENCY TO 60KC.

11. CHANGE CHAN 2 SCOPE VERTICAL SENSITIVITY TO 0.5V/CM CALIBRATED.

12. DISCONNECT CHAN 2 PROBE FROM CHAN B MON JACK AND CONNECT IT TO THE SQUARE OUTPUT JACK OF THE GATE GENERATOR. A SCOPE DISPLAY SUCH AS FIG. 3.2 SHOULD BE OBSERVED.

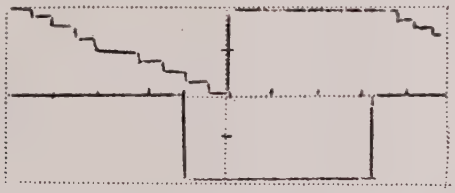

FIG. 3.2. OSCILLOSCOPE DISPLAY OF PROGRAM MODE TRIGGERED AT 60KC.

13. DECREASE GATE SIGNAL TO 40KC.

14. SWITCH 400 MODE SWITCH TO GATE. A DISPLAY AS SHOWN IN FIG. 3.3. SHOULD BE OBSERVED.

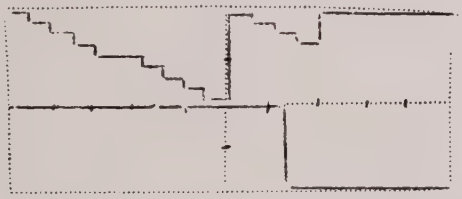

FIG. 3.3. OSCILLOSCOPE DISPLAY OF GATE MODE.

NOTE THAT THE GATE SIGNAL ENDS DURING THE 13TH INCREMENT BUT THE SYNTHESIZER CONTINUES TO RUN UNTIL THE END OF THE 14TH INCREMENT.

15. SLOWLY DECREASE THE GATE FREQUENCY. NOTE THAT NO CHANGE IN THE SYNTHESIZER OUTPUT OCCURS UNTIL THE GATE LASTS LONGER THAN 14 INCREMENTS. THEN, ANOTHER PAIR OF INCREMENTS IS ADDED TO THE SEQUENCE; THE SYNTHESIZER ALWAYS PRODUCES AN EVEN NUMBER OF INCREMENTS.

16. DISCONNECT THE CHAN 2 PROBE FROM THE GATE GENERATOR AND CONNECT IT TO THE SLOW TRIGGER OUT JACK.

17. SWITCH SCOPE SWEEP TO 5μSEC/CM CALIBRATED.

18. INCREASE GATE GENERATOR TO 40KC.

19. CHANGE SCOPE SWEEP TO 5μSEC/CM.

20. POSITION CHAN 2 SCOPE TRACE FOR DISPLAY AS SHOWN IN FIG. 3.4.

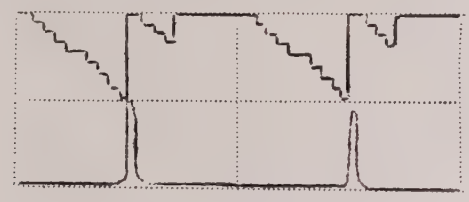

FIG. 3.4. OSCILLOSCOPE DISPLAY OF GATE MODE AND TRIGGER OUTPUT.

NOTE THAT TRIGGER PULSES START ONLY AT THE END OF THE TENTH INCREMENT. THERE IS NO TRIGGER AT THE START OF THE GATED SEQUENCE SINCE THERE IS NO TRANSISTION FROM INCREMENT #10 TO #1 AT THAT POINT. FOR THIS REASON, IT IS BEST TO TRIGGER FROM THE GATE GENERATOR IN THIS MODE.

21. SWITCH 400 MODE SWITCH TO PROGRAM POSITION. NOTE THAT TRIGGER PULSES ARE STILL PRESENT IN THE SAME LOCATION.

22. INCREASE GATE GENERATOR TO 70KC.

23. SWITCH MODE SWITCH TO GATE. NOTE THAT THE 400 DOES NOT PRODUCE A FULL 10 INCREMENT SEQUENCE AND THAT NO TRIGGER PULSE IS PRODUCED.

24. DECREASE GATE GENERATOR FREQUENCY TO 40KC.

25. DISCONNECT CHAN 2 PROBE FROM BOTH CHAN A MON JACK AND FROM THE SCOPE.

26. CONNECT 50Ω COAXIAL CABLE TO FAST TRIGGER OUT JACK. CONNECT A THROUGH TERMINATOR TO THE OTHER END OF THE CABLE AND CONNECT THE FREE END OF THE TERMINATOR TO CHAN 2 SCOPE INPUT.

27. SWITCH CHAN 2 SENSITIVITY TO 2V/CM CALIBRATED.

28. SWITCH SCOPE SWEEP TO 2μSEC/CM CALIBRATED. NOTE THAT THE FAST AND SLOW TRIGGERS ARE COINCIDENT. ALSO NOTE THE FAST RISE AND FALL OF THE FAST TRIGGER; THIS MAKES USE OF TERMINATED TRANSMISSION SYSTEMS ADVISABLE FOR USE WITH THE FAST TRIGGER.

29. DISCONNECT BANANA CORD FROM SCOPE TRIGGER JACK.

30. DISCONNECT 50Ω TERMINATOR AND CABLE TOGETHER FROM CHAN 1 SCOPE INPUT AND CONNECT IT TO SCOPE TRIGGER INPUT.

31. Connect 10X probe to Chan 1 input and connect to Chan A MON jack.

32. Switch Chan 1 vertical sensitivity to 0.2V/cm.

33. Disconnect gate generator from EXT GATE jack.

34. Press MAN GATE button. Adjust scope triggering for a stable display while button is depressed.

35. Note that the synthesizer runs continuously and that trigger pulses are produced.

36. Switch 400 TIME/INCREMENT to 100msec.

37. Switch scope sweep to 100msec/cm.

38. Switch 400 MODE switch to PROGRAM.

39. Disconnect 50Ω cable and terminator from scope trigger jack.

40. Connect an unterminated BNC coax from scope trigger input to EXT GATE jack on 400.

41. Switch scope display mode to Chan 1 only.

42. Adjust scope sweep sensitivity so that sweep is triggered whenever MAN GATE button is pressed. A voltage is available for external use at the EXT GATE jack whenever the MAN GATE button is pressed; this voltage may be used easily for scope triggering in manual gated modes.

    Note that when the button is pressed only 10 increments are produced, as with EXT GATE signal.

43. Disconnect coax from scope trigger to EXT GATE jack.

44. Reconnect 50Ω cable and terminator to scope trigger jack. It should still be connected to FAST TRIGGER OUT.

45. Switch scope sweep to 5μsec/cm, dual trace.

46. Switch 400 TIME/INCREMENT to 1μsec.

47. Switch 400 MODE switch to RUN.

48. Press MAN GATE button. This starts the 400.

49. ADJUST SCOPE SWEEP FOR A STABLE DISPLAY AS SHOWN IN FIG. 3.5.

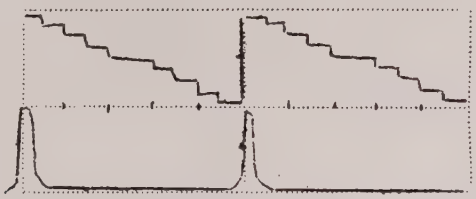

FIG. 3.5 OSCILLOSCOPE DISPLAY SHOWING RUN MODE.

NOTE THAT IN THIS MODE THE OUTPUT SIGNAL IS CONTINUOUS. SINCE IN THIS MODE INCREMENT 1 ALWAYS FOLLOWS INCREMENT 10, TRIGGERING FROM TRIGGER OUT JACKS ALLOWS SHOWING COMPLETE WAVEFORM.

50. CHANGE 400 MODE SWITCH TO L.O. RUN.

51. PRESS MAN GATE BUTTON. A DISPLAY AS IN FIG. 3.6 SHOULD BE OBSERVED.

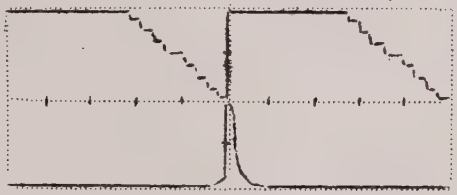

FIG. 3.6 OSCILLOSCOPE DISPLAY SHOWING L.O. RUN

THIS MODE IS ESSENTIALLY A PROGRAM MODE WITH THE SEQUENCE RESTARTED APPROXIMATELY 15μSEC AFTER THE END OF EACH PROGRAM. THIS MODE IS INTENDED FOR USE WITH SLOPE GENERATING PLUG-IN MODULES.

52. SWITCH MODE SWITCH TO GATE.

53. CONNECT TERMINATED 50Ω COAX FROM 301 GENERATOR TO EXT TIME JACK.

54. SWITCH TIME SOURCE SWITCH TO +.

55. SET 301 FREQUENCY TO 500KC.

56. SWITCH 400 MODE SWITCH TO RUN.

57. PRESS MAN GATE BUTTON. NOTE THAT INCREMENTS ARE 2μSEC WIDE:

$$\frac{1}{500KC} = 2\mu SEC$$

58. Change 301 frequency. Note that the 400 is timed directly by the external timing generator and not just synchronized. Reset the 301 to 500KC.

59. Switch TIME SOURCE to ±. (Note: it may on some occasions be necessary to switch to GATE mode to reset the 400 for proper operation when the TIME SOURCE switch is changed.)

60. Note that the increments are now 1μsec wide. In this position, increments switch on both positive and negative slopes of the input signal; increment timing is thus sensitive to symmetry of the external time signal. This operation is necessary for generation of increments shorter than 1μsec with external timing.

61. Switch MODE switch to GATE.

62. Press MAN GATE button. Note that the instrument is gated with external timing the same as internal timing. Other modes also function with external timing in the same manner.

63. Switch TIME SOURCE to +.

64. Switch MODE to RUN.

65. Press MAN GATE button.

66. Set scope to 2sec/cm.

67. Set scope sweep for free-run operation. Disconnect ext. time generator from EXT TIME jack.

68. Press MAN TIME switch several times. Note that increments are switched each time the button is pressed.

69. Switch TIME SOURCE to ±.

70. Press MAN TIME switch several times. Note that increments are switched each time the button is either pressed or released.

71. Switch TIME SOURCE to +.

72. Switch MODE to PROGRAM.

73. Press MAN TIME button ten times. Pressing the button once more produces no change in the output since the PROGRAM mode operates with manual timing signals as well as all other timing signals.

74. Switch MODE switch to GATE.

75. Switch TIME SOURCE to INTERNAL.

76. Switch scope sweep to 2μsec/cm.

77. Switch MODE to RUN.

78. Adjust scope triggering for a stable display.

79. Turn TIME/INCREMENT VARIABLE knob counterclockwise. Note that the small UNCAL light goes on and that the increment timing increases up to four times or greater at full CCW. This allows setting any increment timing from 1sec to 100nsec.

80. Return TIME/INC. VAR to CAL position.

This completes operation of the basic 400 Waveform Synthesizer. In the remaining steps, operation of the available plug-ins is detailed. Except where indicated, control settings are as in step 5, page 3-4.

TYPES 4001 AND 4003 PLUG-INS

THESE TWO PLUG-INS ARE ESSENTIALLY IDENTICAL EXCEPT FOR GAIN AND OUTPUT LOAD LIMITATIONS AND WILL BE INCLUDED TOGETHER.

1. SWITCH MODE TO PWR OFF.

2. INSERT A TYPE 4001 OR 4003 PLUG-IN INTO THE "A" POSITION.

3. CONNECT CHAN 1 ×10 SCOPE PROBE TO A MON JACK.

4. CONNECT 50Ω CABLE (IF TYPE 4001 IS USED) OR 93Ω CABLE (IF TYPE 4003 IS USED) TO MAIN JACK. TERMINATE THE CABLE WITH A TERMINATOR OF THE APPROPRIATE IMPEDANCE AND CONNECT TO CHAN. 2 PROBE INPUT.

5. SET CHAN. 1 SENSITIVITY TO 0.2V/CM AND CHAN 2 TO 5V/CM.

6. CONNECT FAST TRIGGER OUT TO SCOPE TRIGGER INPUT VIA TERMINATED 50Ω CABLE.

7. SWITCH MODE TO RUN.

8. PRESS MAN GATE BUTTON.

9. ADJUST SCOPE TRIGGER FOR STABLE DISPLAY.

10. SET CHAN. 1 TRACE IN UPPER HALF OF SCREEN AND CHAN. 2 IN LOWER HALF.

11. NOTE THAT THE MAIN SIGNAL IS AN INVERSION AND AMPLIFICATION OF THE MON SIGNAL. THE INVERSION IS INDICATED BY THE NEGATIVE SIGN OF THE GAIN INDICATED ON THE FRONT PANEL OF THE PLUG-IN.

    NOTE ALSO THAT THE OUTPUT IS SLIGHTLY LESS THAN INDICATED BY THE GAIN TIMES THE A MONITOR OUTPUT. THIS IS BECAUSE OF THE LOADING OF THE OUTPUTS OF THE PLUG-IN. THE STATED GAINS ARE OPEN-CIRCUIT VALUES.

TYPE 4002

CONTROL SETTINGS ARE AS IN STEPS 1 - 6 OF THE 400 OPERATING INSTRUCTIONS UNLESS SHOWN OTHERWISE BELOW.

1. SWITCH 400 MODE SWITCH TO PWR OFF.

2. INSERT A 4002 INTO EITHER CHANNEL. A SECOND PLUG-IN MUST BE PRESENT IN THE OTHER CHANNEL; IF A 4005 IS USED, ITS PROGRAM SWITCH MUST BE IN "10" POSITION.

3. CONNECT SCOPE CHAN 1 X10 PROBE TO 4002 MON JACK.

4. CONNECT SCOPE CHAN 2 X10 PROBE TO 4002 MAIN OUT JACK.

5. SET SCOPE SENSITIVITY TO 0.2V/CM ON CHAN 1 AND 0.5V/CM ON CHAN 2.

6. CONNECT FUNCTION GENERATOR OUTPUT TO 400 EXT GATE JACK WITH A TERMINATED 50Ω CABLE.

7. CONNECT FUNCTION GENERATOR TRIGGER OUTPUT TO SCOPE TRIGGER INPUT.

8. SELECT A 10V P-P SQUARE AT 40KHZ FROM THE FUNCTION GENERATOR.

9. ADJUST PROGRAM POTS ON CHANNEL CORRESPONDING TO 4002 AS FOLLOWS:

POT #	POSITION	POT #	POSITION
1	0	6	-
2	+	7	½-
3	0	8	0
4	-	9	+
5	0	10	+

10. SWITCH 400 MODE SWITCH TO PROGRAM.

11. ADJUST SCOPE TRIGGER FOR STABLE DISPLAY.

12. POSITION CHAN 1 TRACE ON UPPER HALF OF SCOPE SCREEN AND CHAN 2 ON THE LOWER HALF. THE WAVEFORM SHOULD BE AS IN FIG. 3.7

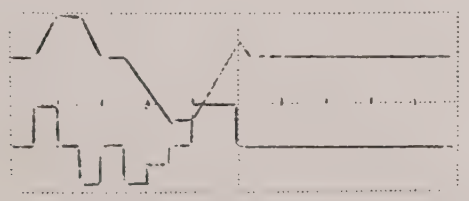

FIG. 3.7 PROGRAM MODE SLOPES

13. NOTE THAT THE OBSERVED CHANGE ALONG EACH SLOPE IS 2.5 TIMES THE VOLTAGE AT THE MON JACK. A SETTING OF ZERO VOLTS GIVES ZERO VOLT CHANGE IN THE OUTPUT DURING THAT INCREMENT; A +2V SETTING PRODUCES A +5V CHANGE DURING THE CORRESPONDING INCREMENT.

14. NOTE THAT THE VOLTAGE AT THE MAIN OUTPUT DOES NOT MATCH THE LEVEL FOLLOWING THE PROGRAM END, BUT IS CLAMPED WHEN THE PROGRAM IS COMPLETED.

15. ADJUST L.O. DC (LOCKOUT DC LEVEL) ON THE 4002. NOTE THAT THE ADJUSTMENT SHIFTS THE BASELINE AND THAT THE WAVEFORM BEGINS AND ENDS AT THE BASELINE.

16. CHANGE PROGRAM POT #3. OBSERVE THAT THE WHOLE WAVEFORM FOLLOWING THAT INCREMENT CHANGES LEVEL. THIS IS THE EXPECTED RESULT FROM THE SIGNAL GENERATING PROCEDURE USED AND IS CONSIDERED NORMAL.

17. CHANGE PROGRAM POT #1. NOTE THAT THE SAME SITUATION OCCURS AS IN THE PREVIOUS STEP. UNLIKE THE STEP PLUG-INS, HOWEVER, #1 CONTROL HAS ONLY A SMALL EFFECT ON THE VOLTAGE DURING LOCKOUT AND A DISTINCT FIRST INCREMENT CAN BE OBSERVED.

18. ADJUST PROGRAM POT #10 UNTIL THE WAVEFORM AT THE END OF THE PROGRAM MATCHES THE BASELINE. THIS PREVENTS A SHIFT IN SIGNAL LEVEL WHEN CHANGING MODES.

19. CHANGE 400 MODE SWITCH TO GATE.

20. OBSERVE THAT THE WAVEFORM IS NOT THE SAME NUMBER OF INCREMENTS AS BEFORE, BUT IT IS STILL CLAMPED TO THE BASELINE.

21. CHANGE 400 MODE SWITCH TO L.O. RUN AND PRESS MOMENTARILY THE MAN GATE BUTTON.

22. DISCONNECT THE CABLE CONNECTED TO THE FUNCTION GENERATOR TRIGGER OUT JACK.

23. CONNECT A TERMINATED 50Ω CABLE FROM THE 400 FAST TRIGGER JACK TO THE SCOPE TRIGGER INPUT.

24. NOTE THE 15μSEC CLAMPED PORTION OF THE WAVEFORM. THIS MODE IS SIMILAR TO PROGRAM MODE EXCEPT THAT NO EXTERNAL GENERATOR IS NEEDED. SETTING WAVEFORMS IS THUS SIMPLIFIED WITHOUT HAVING THE WAVEFORM "FLOAT."

25. CHANGE 400 MODE SWITCH TO RUN.

26. PRESS, MOMENTARILY, THE MAN GATE BUTTON.

27. OBSERVE THAT THE WAVEFORM IS NOW PRODUCED WITHOUT THE CLAMPED INTERVAL AND THAT LITTLE CHANGE IN LEVEL OCCURS.

28. CHANGE 400 MODE SWITCH TO L.O.RUN.

29. PRESS THE MAN GATE BUTTON MOMENTARILY.

30. ADJUST PROGRAM POT #10 SO THAT THE END OF THE PROGRAM NO LONGER MATCHES THE BASELINE.

31. CHANGE 400 MODE SWITCH TO RUN.

32. PRESS THE MAN GATE BUTTON MOMENTARILY.

33. NOTE THAT THE WAVEFORM SHIFTED LEVEL WHEN MODES WERE CHANGED AND THAT THE DIRECTION OF THE SHIFT WAS THE SAME AS THE MIS-MATCH AT THE END OF THE PROGRAM IN L.O. RUN.

TYPE 4005 PLUG-IN

THIS IS THE TWENTY-INCREMENT PLUG-IN. THE OUTPUT CHARACTERISTICS ARE IDENTICAL TO THE 4001 PLUG-IN.

1. SWITCH MODE TO PWR OFF.
2. INSERT A TYPE 4005 PLUG-IN INTO THE "A" POSITION. A PLUG-IN MUST ALSO BE PRESENT IN THE "B" POSITION.
3. CONNECT CHAN 1 X10 PROBE TO A MON JACK.
4. CONNECT CHAN 2 X10 PROBE TO B MON JACK.
5. SET CHAN 1 AND 2 SENSITIVITY TO 0.2V/CM.
6. CONNECT FUNCTION GENERATOR TO EXT GATE JACK.
7. CONNECT FUNCTION GENERATOR TRIGGER OUTPUT JACK TO SCOPE TRIGGER INPUT VIA BANANA PATCH CORD.
8. SET INCREMENT POTS AS IN STEP 5, PAGE 3-4.
9. SWITCH PROGRAM SWITCH (ON 4005 FRONT PANEL) TO 10.
10. SWITCH 400 MODE SWITCH TO PROGRAM.
11. ADJUST SCOPE TRIGGERING UNTIL DISPLAY IS PRESENTED AS IN FIG. 3.7.

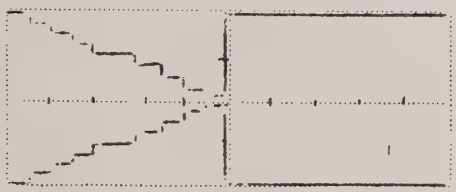

FIG. 3.7

NOTE CAREFULLY THE RELATIONSHIP BETWEEN THE TWO TRACES.

12. SWITCH PROGRAM SWITCH TO 20. A DISPLAY SUCH AS IN FIG. 3-8 SHOULD BE OBSERVED.

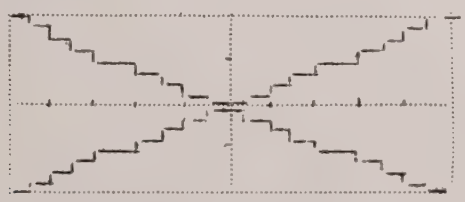

FIG. 3-8 PROGRAM 20 DISPLAY

NOTE THAT THE PROGRAM NOW LASTS 20 INCREMENTS INSTEAD OF 10.

OBSERVE ALSO THAT DURING THE SECOND 10 INCREMENTS, THE LEVELS FROM A MON ARE DETERMINED BY THE B CHANNEL INCREMENT POTS AND FROM B MON, BY THE A POTS. THUS, DURING THE SECOND 10 INCREMENTS, THE SOURCE OF THE SIGNAL SUPPLIED TO BOTH PLUG-INS IS CHANGED.

13. TURN B #1 POT. NOTE THAT THE FIRST INCREMENT OF THE LOWER TRACE AND THE ELEVENTH INCREMENT OF THE UPPER TRACE CHANGE IDENTICALLY. THUS, IN ESSENCE, THE SIGNAL PRODUCED FROM ONE PLUG-IN IS SHIFTED 180° IN COMPARISON WITH THE OTHER.

14. SWITCH SCOPE SWEEP TO 5μSEC/CM.

15. DISCONNECT CHAN. 2 PROBE FROM B MON JACK AND CONNECT TO THE SLOWER TRIGGER OUT JACK.

16. CHANGE CHAN. 2 VERTICAL SENSITIVITY TO 0.5V/CM.

17. NOTE THAT TRIGGER PULSES ARE GENERATED ONLY AT THE END OF THE 20TH INCREMENT OR FULL PROGRAM.

18. SWITCH PROGRAM SWITCH TO 10. NOTE THAT NOW THE PROGRAM IS COMPOSED OF 10 INCREMENTS AND THE TRIGGER OCCURS AT THE END OF THE PROGRAM.

SECTION IV

CALIBRATION PROCEDURE

TYPE 400 ADJUSTMENT LOCATIONS

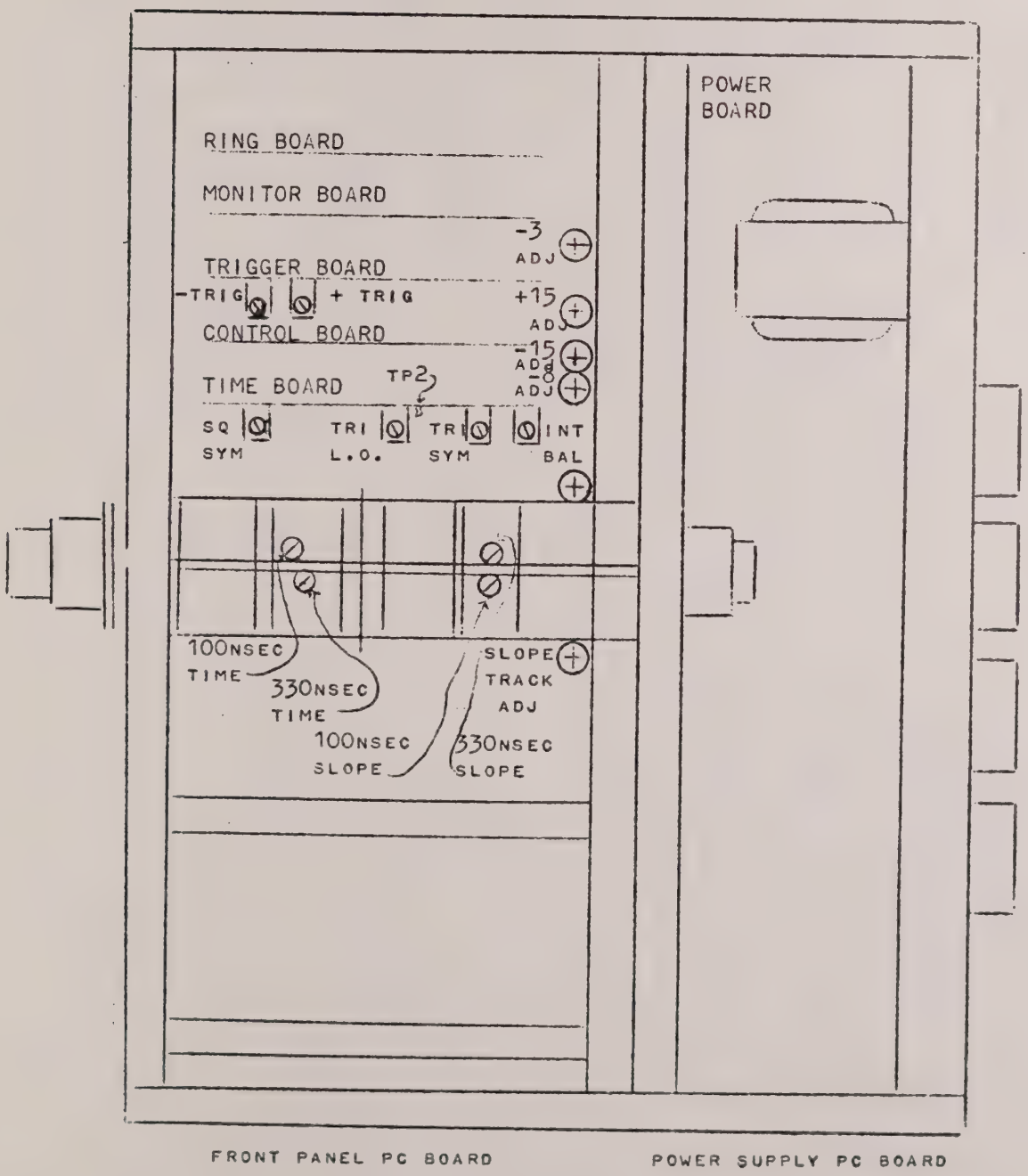

TYPE 400 TEST LOCATIONS

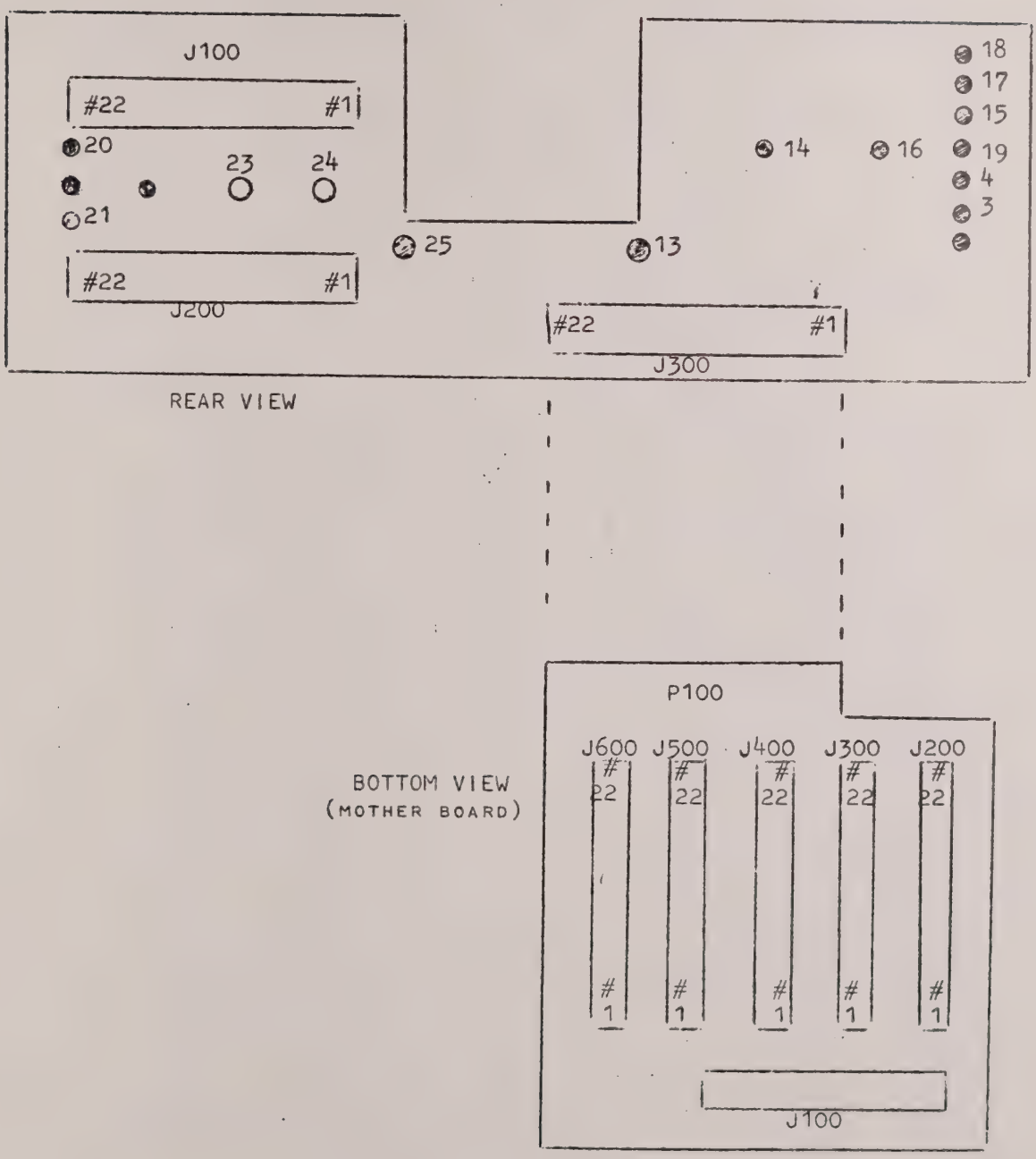

1. EQUIPMENT

A. FUNCTION GENERATOR TO 1MHz (EXACT 301 OR EQUIVALENT)
B. OSCILLOSCOPE, DUAL INPUT, 50MHz MIN. (TEK 580 OR EQUIV.)
C. VOLTMETER, PREFERABLY DIGITAL.
D. VARIABLE POWER TRANSFORMER FOR LINE REGULATION CHECKS.
E. COUNTER, 1µSEC TO 10SEC.

2. TEST CONDITIONS

A. CONTROLS:

TIME/INC	10µSEC CAL	LINE +20V
TIME SOURCE	INT	
MODE	GATE	

P.C. BOARDS AND PLUG-INS

ALL INTERNAL P.C. BOARDS IN PLACE.
ANY TWO 4000 SERIES PLUG-INS IN PLACE.
TWO 40 PROGRAMMERS IN PLACE.

3. MEASUREMENTS

A. ALL MEASUREMENTS ARE MADE FROM INDICATED LOCATION TO GROUND.
B. "CHECK" IN THE ADJUST AT COLUMN INDICATES AN OBSERVATION WITHOUT ADJUSTMENT.

	CONTROLS		MEASURE		ADJUST OR TEST		
STEP	CONTROL	SET	AT	WITH	AT	WHAT	FOR
1	ALL	INITIAL	PWR SUPPLY TP 16	VOLTMETER	CHECK	POWER SUPPLY	APPROX +25V
2	"	"	PWR SUPPLY TP 14	"	"	"	APPROX -25V
3	"	"	PWR SUPPLY TP 18	"	POWER SUPPLY	+15V ADJ	+15.0 ±0.1V
4	"	"	"	"	CHECK LINE REG	+15V	±20mv 100-125V LINE
5	"	"	PWR SUPPLY TP 19	"	POWER SUPPLY	-15V ADJ	-15.0 ±0.1V
6	"	"	"	"	CHECK	-15V LINE REG	±20mv 100-125 LINE
7	"	"	PWR SUPPLY TP 3	"	POWER SUPPLY	-8V ADJ	-8.0 ±0.1V
8	"	"	PWR SUPPLY TP 1	"	"	-3V ADJ	-3.00 ±0.05V
9	"	"	PWR SUPPLY J100 #10	"	CHECK	BIAS SUPPLY	-4.3 ±0.2V
10	"	"	PWR SUPPLY TP18	SCOPE*	"	+15V RIPPLE	<15mv RIPPLE
11	"	"	PWR SUPPLY TP 19	"	"	-15V RIPPLE	<15mv RIPPLE
12	A. CONNECT FUNCTION GENERATOR TO EXT GATE JACK. B. SELECT 10V P-P SQUARE AT 4KHz FROM GENERATOR.						

*INDICATES SCOPE TO BE TRIGGERED FROM FUNCTION GENERATOR, OTHERWISE TRIGGERED INTERNALLY.

	CONTROLS		MEASURE		ADJUST OR TEST		
STEP	CONTROL	SET	AT	WITH	AT	WHAT	FOR
13	ALL	INITIAL	PWR SUPPLY TP 13	SCOPE*	CHECK	SQUARE	6 CYCLE BURST
14	"	"	PWR SUPPLY TP13	"	TIME PC	SQ SYM	MATCH ±100mv LEVEL TOP & BOTTOM OF SQ
15	"	"	TIME BOARD TP 2	"	CHECK	TRI	MEASURE LEVEL
16	"	"	TIME BOARD FRONT END 1.5K-TOP EDGE PC R400	"	TIME PC	INT BAL	SAME LEVEL ±.5V AS STEP 15
17	TIME VAR	FULL CCW	PWR SUPPLY TP 13	SCOPE	"	TRI SYM	MATCH EACH ½ PERIOD OF SQUARE ±2%
18	"	FULL CW	"	"	"	SQ SYM	"
19	REPEAT STEPS 17 AND 18 UNTIL BOTH CONDITIONS ARE MET.						
20	ALL	INITIAL	TIME BOARD TP 2	SCOPE*	TIME PC	TRI LOCKOUT	MATCH LOCKOUT & TRI BOTTOM ±20mv
21	CHANGE FUNCTION GENERATOR TO TRI OUT AT 1KHz.						
22	ALL	INITIAL	PWR SUPPLY J100 #6 & INPUT TRI	SCOPE* DUAL TRACE	CHECK	LOCKOUT	L.O. DROPS BEFORE INPUT RISES TO +5V
23	"	"	"	"	"	"	L.O. RISES BEFORE INPUT FALLS TO 0.0V
24	DISCONNECT FUNCTION GENERATOR.						
25	ALL MAN GATE	INITIAL PUSH	POWER SUPPLY J100 #6	SCOPE	CHECK	LOCKOUT	L.O. DROPS
26	MAN GATE	RELEASE	"	"	"	"	L.O. RISES
27	A. CONNECT FUNCTION GENERATOR TO EXT TIME JACK. B. SELECT 5V P-P SQUARE AT 100KHz. C. TRIGGER SCOPE (10.0µsec/cm) ON A + SLOPE OF SQUARE FROM GENERATOR.						
28	TIME SOURCE MODE MAN GATE	EXT + RUN PUSH MOMENTARILY	MOTHER BD J400 #14	SCOPE AC COUPLED	TRIGGER DC	+ TRIG	SPIKES +0.7V APPROX AT 10, 20,30µsec ETC
29	TIME SOURCE MAN GATE	EXT PUSH MOMENTARILY	"	"	"	-TRIG	SPIKES +0.7V APPROX AT 5, 10,15µsec ETC.

*INDICATES SCOPE TO BE TRIGGERED FROM FUNCTION GENERATOR, OTHERWISE TRIGGERED INTERNALLY.

TYPE 400 CALIBRATION PROCEDURE

	CONTROLS		MEASURE		ADJUST OR TEST		
STEP	CONTROL	SET	AT	WITH	AT	WHAT	FOR
30	TIME SOURCE MAN GATE	EXT + PUSH MOMENTARILY	PWR SUPPLY P200 #11	SCOPE AC COUPLED	TRIGGER PC	+ TRIG	NEG PULSE 10µSEC WIDE SPACE 100µSEC
31	TIME SOURCE MAN GATE	EXT ± PUSH MOMENTARILY	"	"	"	-TRIG	NEG PULSE 5µSEC WIDE SPACED 50µSEC
32	A. DISCONNECT FUNCTION GENERATOR FROM EXT TIME JACK. B. CONNECT FUNCTION GENERATOR TO EXT GATE JACK C. SELECT 10V P-P SQUARE AT 3KHz. D. TRIGGER SCOPE AT 20µSEC/CM FROM + SLOPE OF SQUARE FROM GENERATOR. E. IF A 4005 PLUG-IN IS USED, SWITCH ITS PROGRAM SWITCH TO "10."						
33	ALL	INITIAL	FAST TRIGGER OUT	SCOPE	CHECK	TRIGGER PULSE	+4.0 ±0.5V PULSE APPROX .5µSEC WIDE
34	"	"	SLOW TRIGGER OUT REAR	"	"	"	+10V ±1V PULSE
35	"	"	TRIGGER OUT REAR	"	"	"	SAME AS STEP 33
36	"	"	A MON OUT	"	A1 A10 PROGRAM POTS	SIGNAL	EACH POT CONTROLS LEVEL IN SEQUENCE
37	"	"	B MON OUT	"	B1 B10 PROGRAM POTS	"	"
38	MODE	PROGRAM	"	"	CHECK	"	10 LEVELS ONLY
39	A. DISCONNECT FUNCTION GENERATOR FROM EXT GATE JACK. B. CONNECT FUNCTION GENERATOR TO GATE IN JACK (REAR).						
40	MODE	PROGRAM	B MON OUT	SCOPE	CHECK	SIGNAL	10 LEVELS ONLY
41	TRIGGER SCOPE FROM SLOW TRIGGER OUT.						
42	MODE	L.O. RUN	B MON OUT	SCOPE	CHECK	SIGNAL	1ST LEVEL 5-15µSEC LONGER THAN OTHERS
43	MODE MAN GATE	RUN PUSH MOMENTARILY	"	"	"	"	ALL LEVELS SAME WIDTH
44	TIME SOURCE	EXT ±	"	"	"	"	LEVELS CHANGE WHEN BUTTON IS PRESSED/RELEASED
45	ALL MODE MAN GATE	INITIAL RUN PUSH MOMENTARILY	FAST TRIGGER	COUNTER	POWER SUPPLY	TIME CAL	100µSEC ±1µSEC
46	REPEAT STEP 45 FOR TIME/INC SWITCH FROM 330MSEC - 1µSEC. ADJUST UNTIL ALL ARE WITHIN 5% (COUNTER READS 10X TIME/INC).						
47	TIME/INC	330NSEC	FAST TRIGGER	COUNTER	TIME SWITCH	330NSEC CAL	3.30µSEC ±1.6µSEC
48	"	100NSEC	"	"	"	100NSEC CAL	1.00µSEC ±.05µSEC

SUGGESTED CALIBRATION RECORD

STEP	VALUE	MEASURED
1	APPROX +25V	
2	APPROX -25V	
3	+15 ±0.1V	
4	±20MV MAX CHANGE	
5	-15 ±0.1V	
6	±20MV MAX CHANGE	
7	-8 ±1V	
8	-3 ±0.1V	
9	-4.3 ±0.2V	
10	15MV RIPPLE	
11	15MV RIPPLE	
13	6 CYCLE BURST	
14	LEVEL TOP/BOTTOM	
15	LEVEL	
16	LEVEL	
19	RATIO 1/2 PERIODS	
20	TRI BOTTOM/L.O.LEVEL	
22	SWITCHING POINT	
23	SWITCHING POINT	
25	L.O. DROPS	
26	L.O.	
28	SPIKES	
29	SPIKES	
30	PULSE	
31	PULSE	
33	4.0±.5V/.5μSEC	
34	10V±1V	
35	4.0±.5V	
36	SEQUENCE	
37	SEQUENCE	
38	10 LEVELS ONLY	
40	10 LEVELS ONLY	
42	1ST INC WIDTH	

STEP	VALUE	MEASURED
43	1ST INC WIDTH	
44	SEQUENCE	
45	100±1μSEC	
46	SEE TIMING	
47	SEE TIMING	
48	SEE TIMING	

TIMING

RANGE	TIME	MEASURED
330MSEC	3.14-346MSEC	
100MSEC	0.95-1.05SEC	
33MSEC	314-346MSEC	
10MSEC	95-105MSEC	
3.3MSEC	31.4-34.6MSEC	
1.0MSEC	9.5-10.5MSEC	
330MSEC	3.14-3.46MSEC	
100μSEC	0.95-1.05MSEC	
33μSEC	314-346μSEC	
10μSEC	95-105μSEC	
3.3μSEC	31.4-34.6μSEC	
1.0μSEC	9.5-10.5μSEC	
330NSEC	3.14-3.46μSEC	
100NSEC	.95-1.05μSEC	

ADJUSTMENT & TEST LOCATIONS
TYPES 4001, 4003 AND 4005

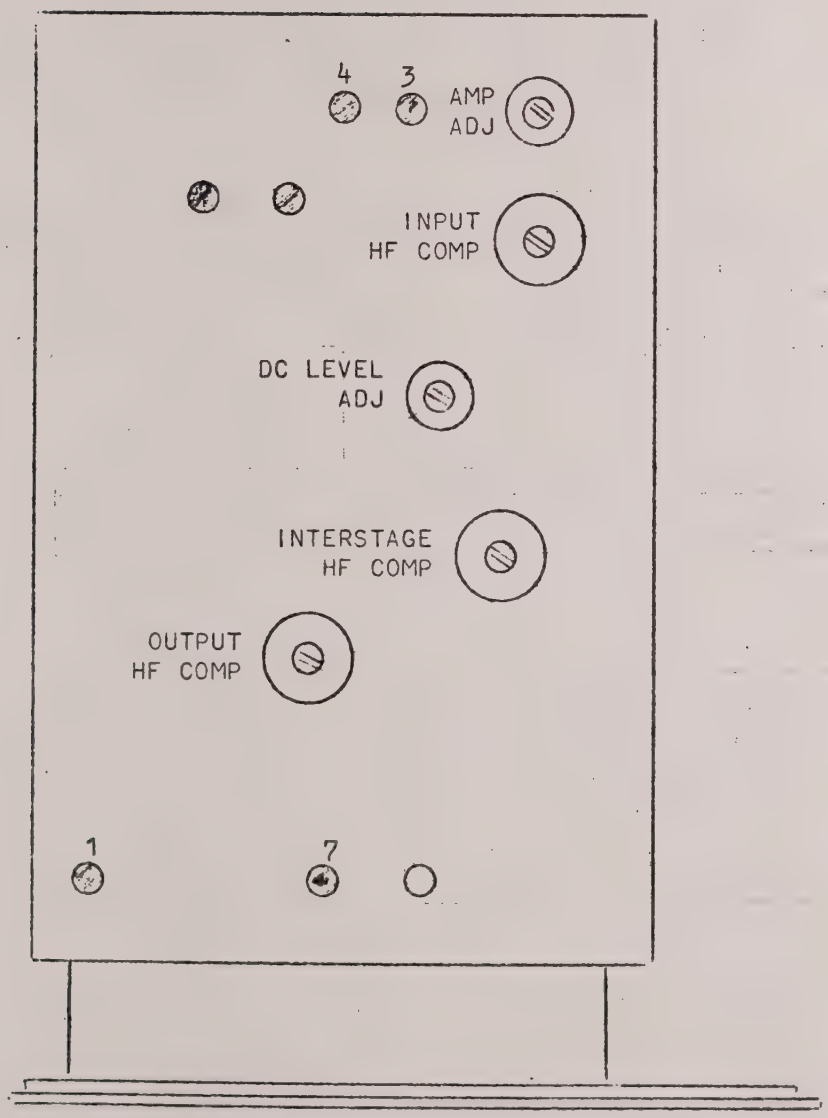

1. EQUIPMENT

   A. CALIBRATED 400 WITH TWO TYPE 40 PROGRAMMERS.
   B. OSCILLOSCOPE (TEKTRONIX TYPE 580 OR EQUIVALENT).
   C. VOLTMETER, PREFERABLY DIGITAL, FOR ALTERNATE PROCEDURE.

2. PLUG-IN REQUIREMENTS

   A. 4001 MAY BE CALIBRATED IN EITHER CHANNEL. ANOTHER PLUG-IN IS NOT REQUIRED FOR THE OTHER CHANNEL.
   B. PROGRAMMER SETTINGS MUST BE DONE ON THE ONE CORRESPONDING TO THE CHANNEL USED FOR CALIBRATION.

	CONTROLS		MEASURE		ADJUST OR TEST		
STEP	MODE	TIME/INC	AT	WITH	AT	WHAT	FOR
1	GATE	10µSEC INT	MON	SCOPE	TYPE 40	#1 POT	0.00 ±.05V
2	RUN MAN GATE PRESS MOMENTARILY	"	"	"	"	#2 POT	+1.00 ±.05V
3	"	"	"	"	"	#3 POT	-1.00 ±.05V
4	GATE	"	MAIN	" "	4001	DC LEVEL	0.00 ±0.10V
5	RUN MAN GATE PRESS MOMENTARILY	"	"	"	"	AMP ADJ	-2.50 ±0.15V 2ND INC.
6	"	"	"	"	CHECK	3RD INC	+2.50 ±0.15V
7	REPEAT STEPS 4, 5 AND 6 UNTIL ALL CONDITIONS ARE MET.						
8	RUN	10µSEC INT	MAIN	SCOPE	4001	INPUT COMP	FLATTEST TOP
9	"	"	"	"	"	INTER-STAGE COMP	BEST CORNER
10	"	"	"	"	"	OUTPUT COMP	BEST RISE
	ALTERNATE PROCEDURE (FOR LOW FREQUENCY APPLICATIONS)						
1	A. SET MODE SWITCH TO GATE. B. SET TIME SOURCE SWITCH TO EXT +.						
2		PRESS MOMENTARILY	MONITOR	VOLTMETER	TYPE 40	#1 POT	0.00 ±.05V
3		"	"	"	"	#2 POT	+1.00 ±.05V
4		"	MAIN	"	4001	DC LEVEL	0.00 ±0.10V
5	PRESS FIRST	"	"	"	"	AMP ADJ	-2.50 ±0.15V
6	REPEAT STEPS 4 AND 5 UNTIL BOTH CONDITIONS ARE MET.						

93337